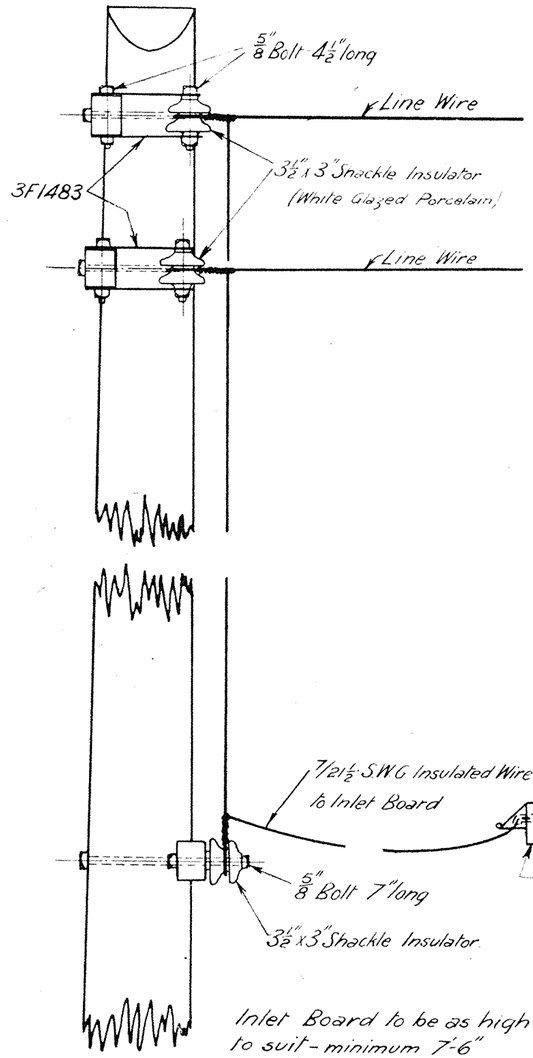

Inlet Board to be as high as possible with crossarm to suit - minimum 7'-6"

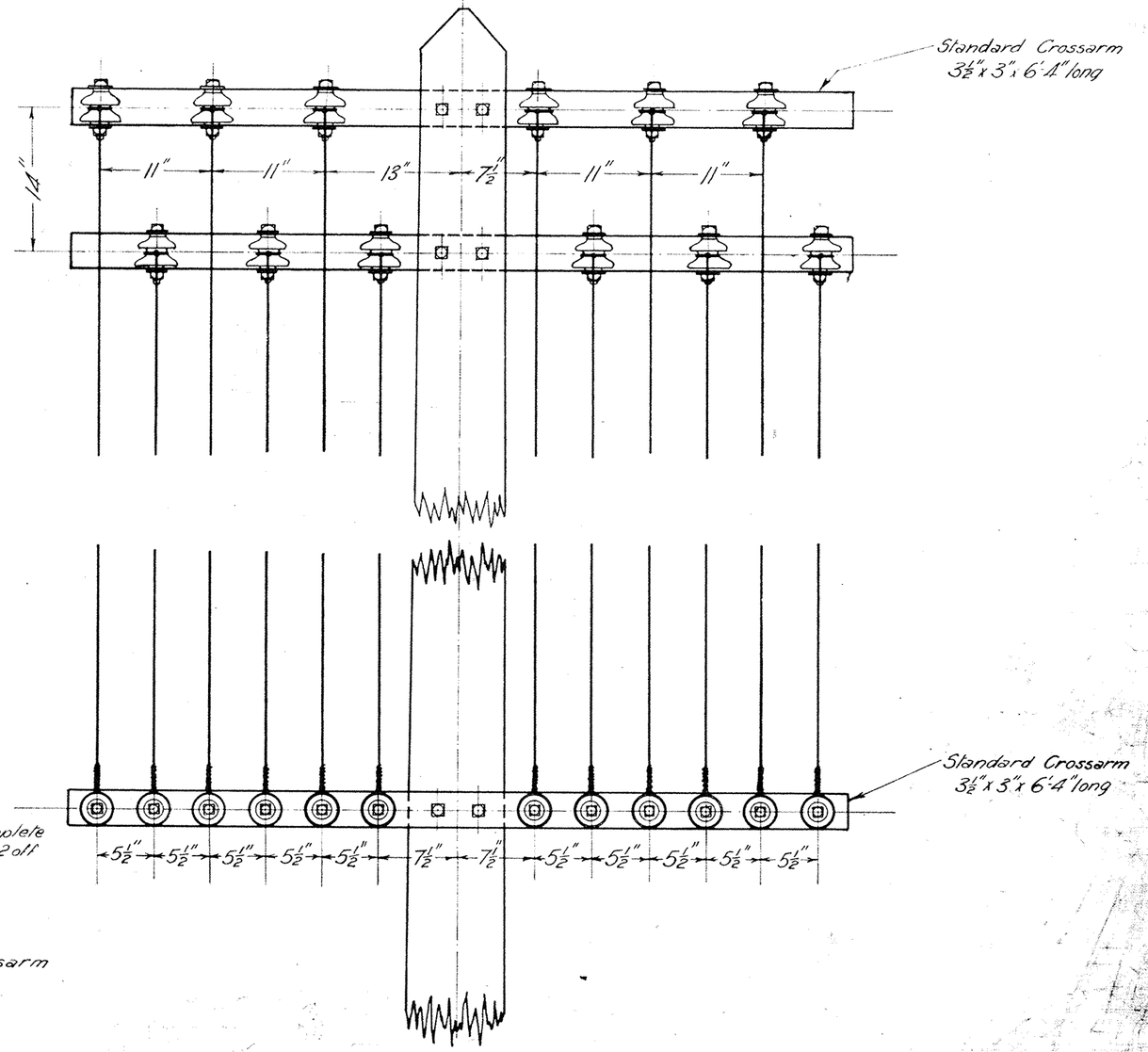

3750
3 12 37
3-5-2

VICTORIAN RAILWAYS

Telegraph Line Fittings

Leading-In Pole

Assembly

Scale - 1" = 1 foot

10-5-23

Chief Eng' of Sigs & Tels	Drawn by	Traced by
	RGC	R.G.C.

A334

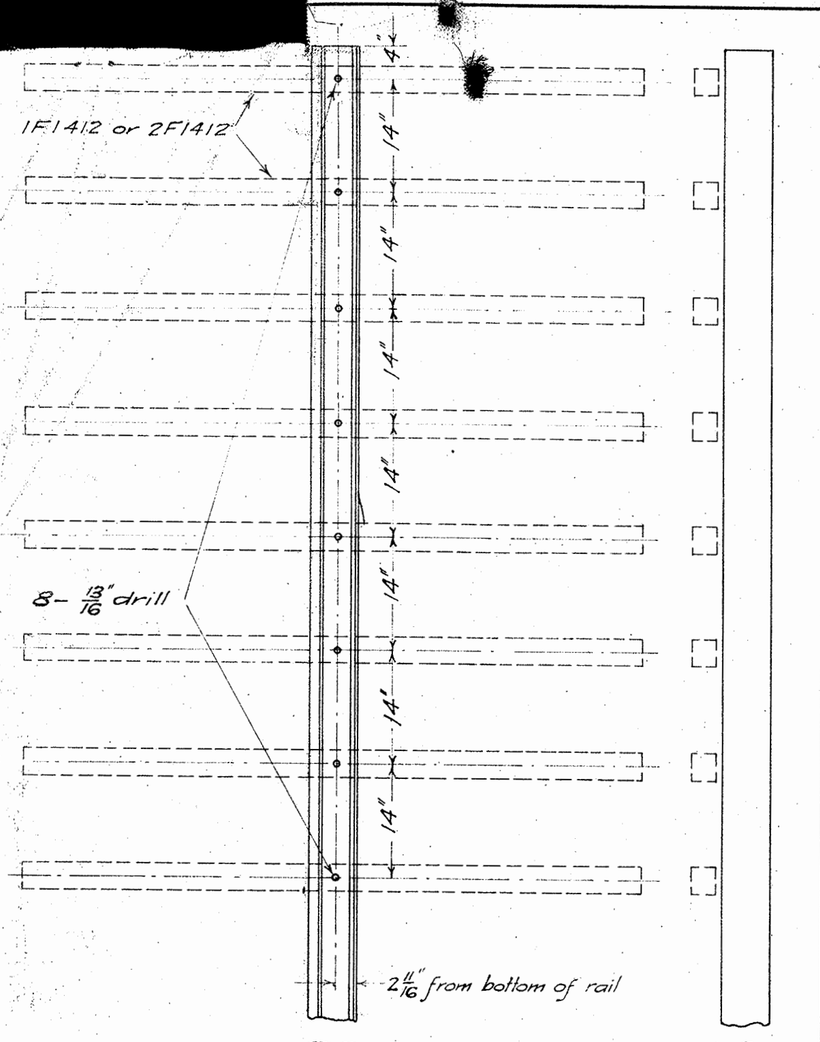

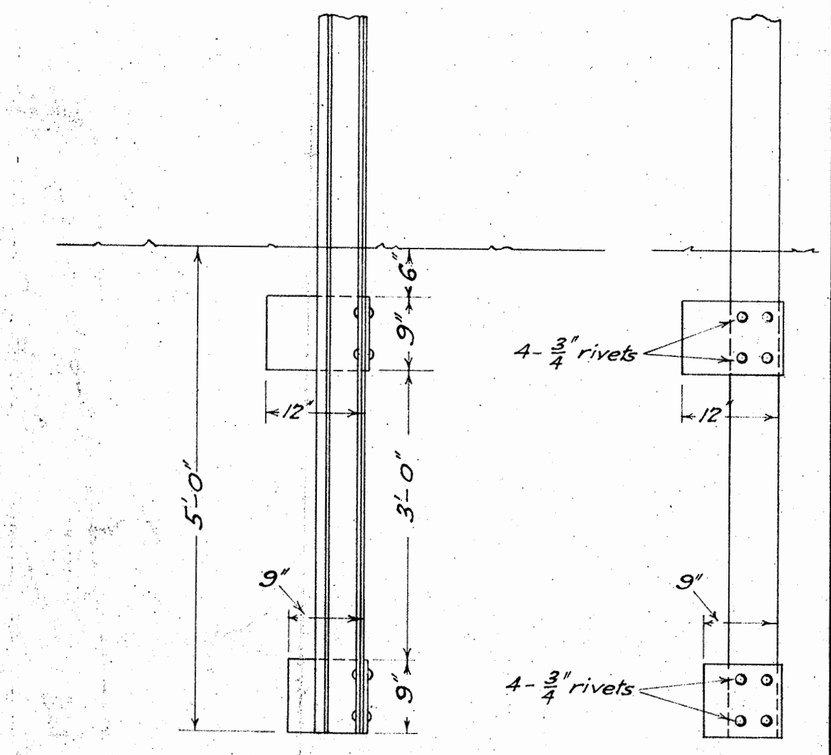

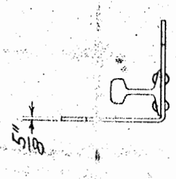

Overall length of pole to be stated
Minimum 28'-0" Maximum 33'-0"

27-5-24 TELEGRAPH POLE 1A375

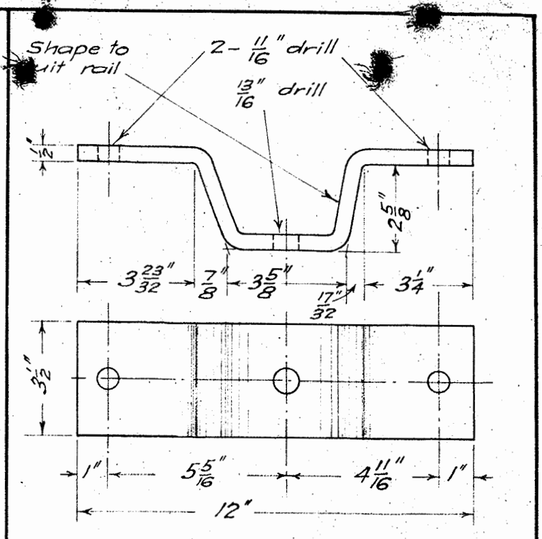

27-5-24 ARM CARRIER 3A375

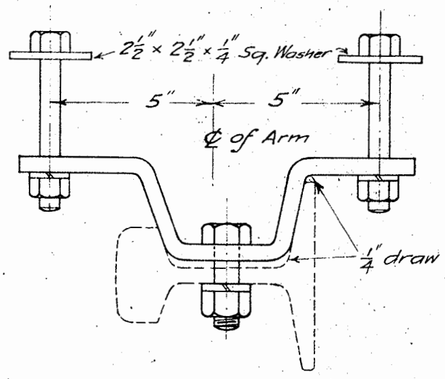

Supplied with :-
2 - 5/8" dia. x 5" Hex. Hd. Bolts with Sq. Washer and Spring Washers
1 - 3/4" dia. x 2 1/2" Hex. Hd. Bolt with 3/4 Spring Washer

27-5-24 ARM CARRIER (COMPLETE) 2A375

A375

VICTORIAN RAILWAYS

TELEGRAPH POLE

100 LB "P" OR "A.S" RAIL

Chief Engr. of Sigs. & Tels.	Drawn by	Traced by
	S.C.O.	S.C.O.

A 375

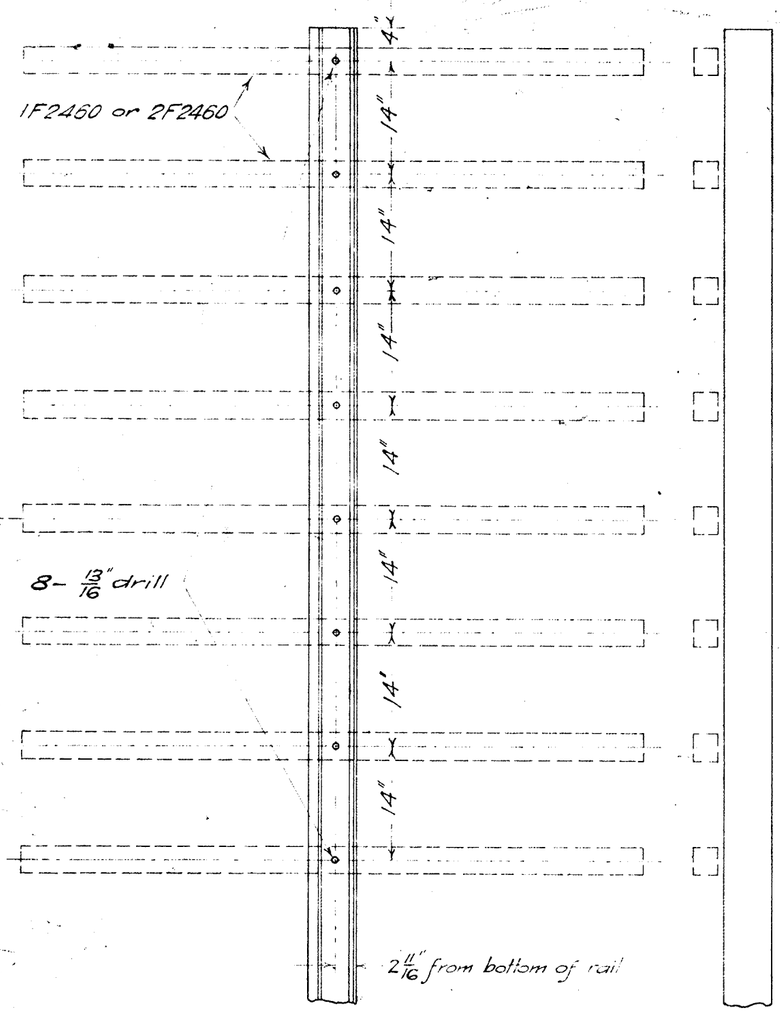

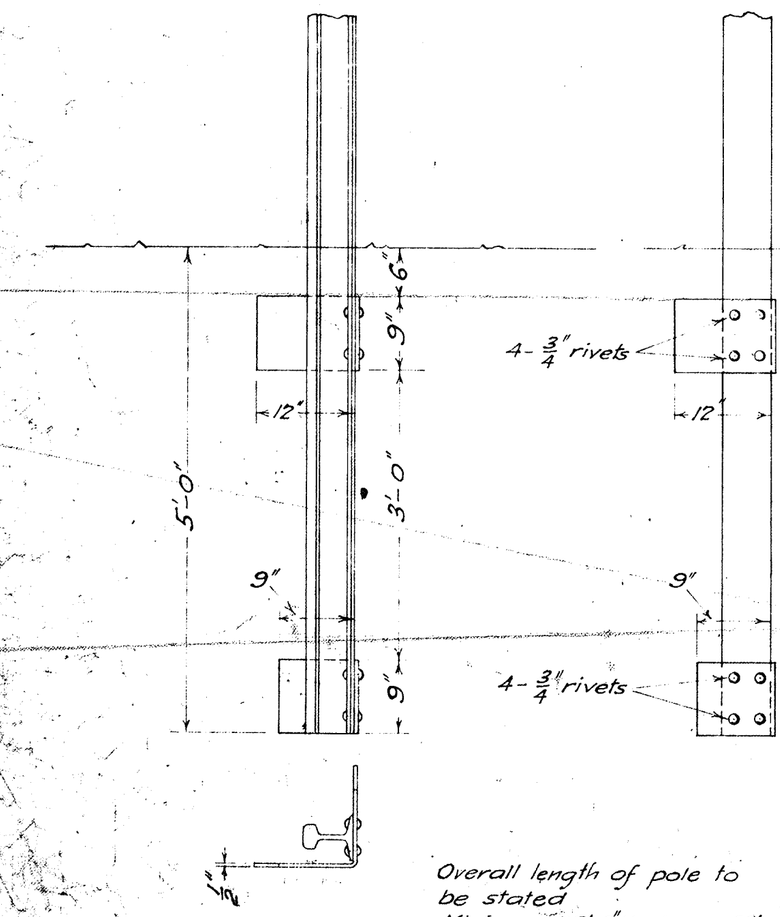

Overall length of pole to be stated
Minimum 28'-0" Maximum 33'-0"

16-11-28/Alt 211.
27-5-24 TELEGRAPH POLE 1A375

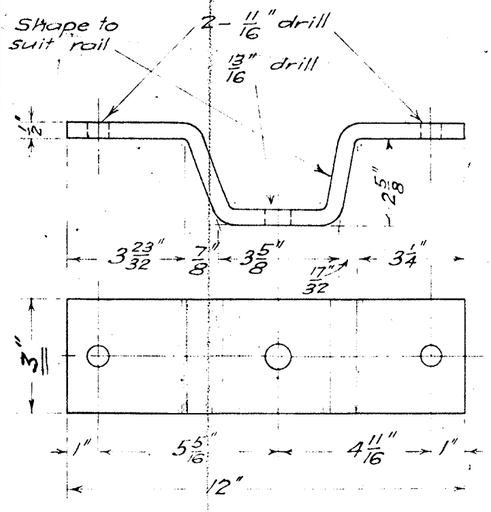

10-11-25/Alt 125
27-5-24 ARM CARRIER 3A375

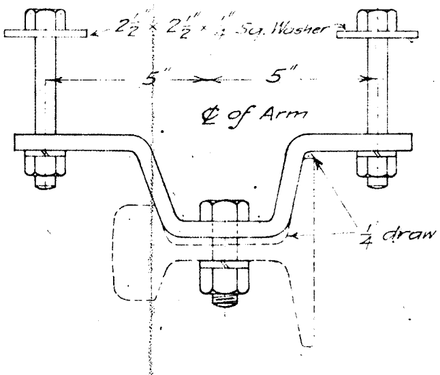

Supplied with :-
2 - 5/8 Whit. Bolts length as ordered with Sq. Washer and Spring Washers
1 - 3/4" dia. x 2 1/2" Hex. Hd. Bolt with Spring Washer

17-7-25/Alt N°107
27-5-24 ARM CARRIER (COMPLETE) 2A375

	VICTORIAN RAILWAYS TELEGRAPH POLE 100 LB "P" OR "A.S" RAIL 27-5-24	Chief Engr. of Sigs. & Tels.	Drawn by S.C.O.	Traced by S.C.O.

A 375

1937-24

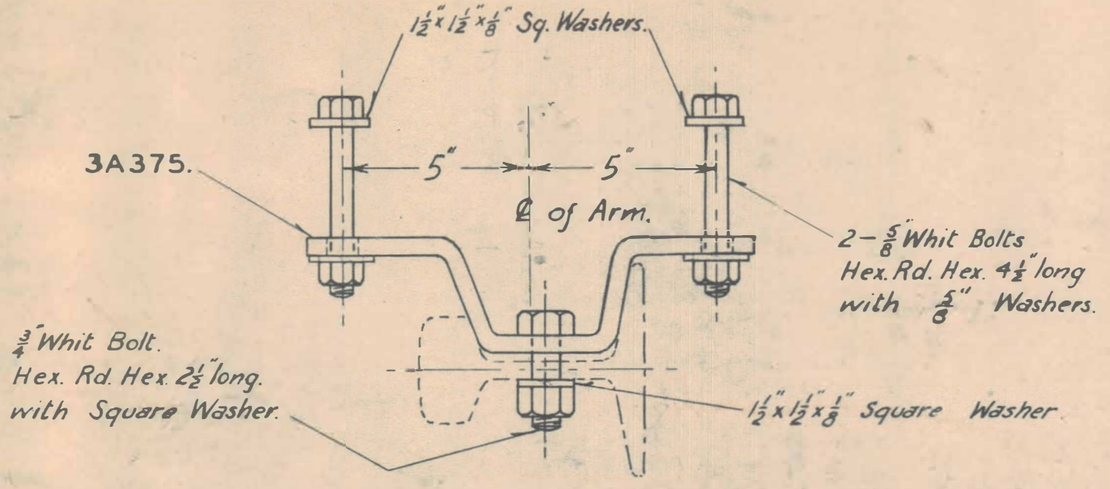

(All Bolts & Washers to be galvanized)

24.11.58/Alt 959.
9.7.54/Alt 817.

ARM CARRIER.
100 lb. "P" or "AS" rail. —— (Complete.) —— 2A375.

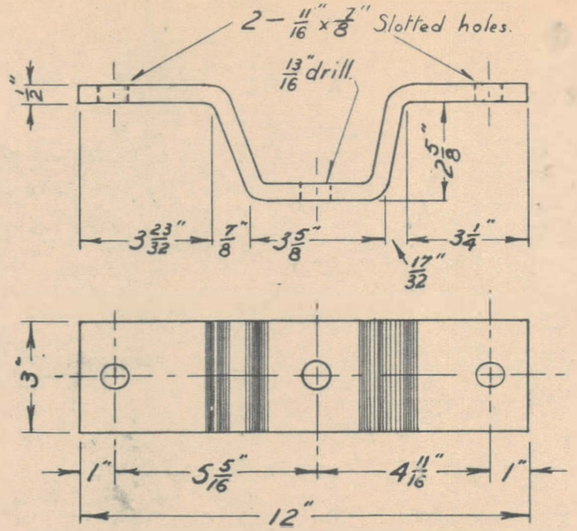

24.11.58/Alt 959.

M.S.
ARM CARRIER.

3A375.

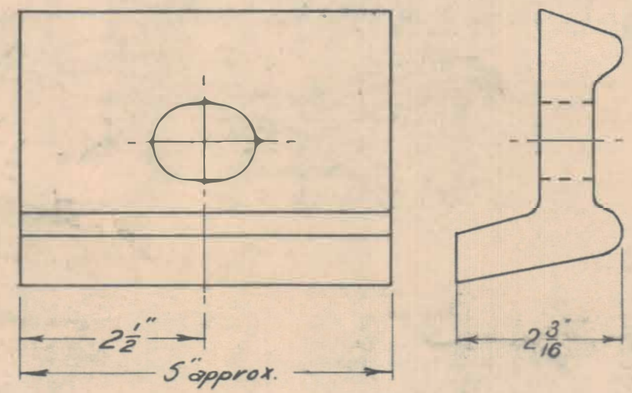

PACKING.
cut from 80 lb "O" fishplate

4A375.

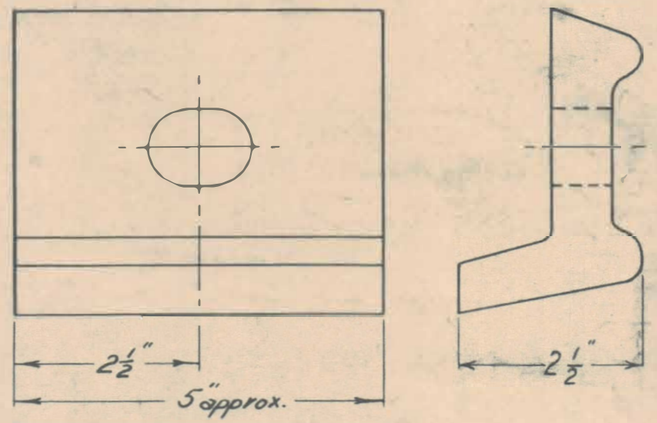

PACKING.
cut from 100 lb "P" fishplate.

5A375.

R3788
T5-3

24.11.58 Alt No 959.	9.7.54 Alteration No 817. JGM	Redrawn including Revision No 1. and Alteration No. 107. " " 125. " " 449. Part Nos. 4A375 & 5A375 added. Previous Title :- Telegraph Pole. 100 lb "P" or "A.S." Rail.	VICTORIAN RAILWAYS. TELEGRAPH POLE, (RAIL) DETAILS. 26-5-49	Sig. & Tel. Engineer.	Drawn by A.D.F.	Traced by A.D.F.
						59

A375

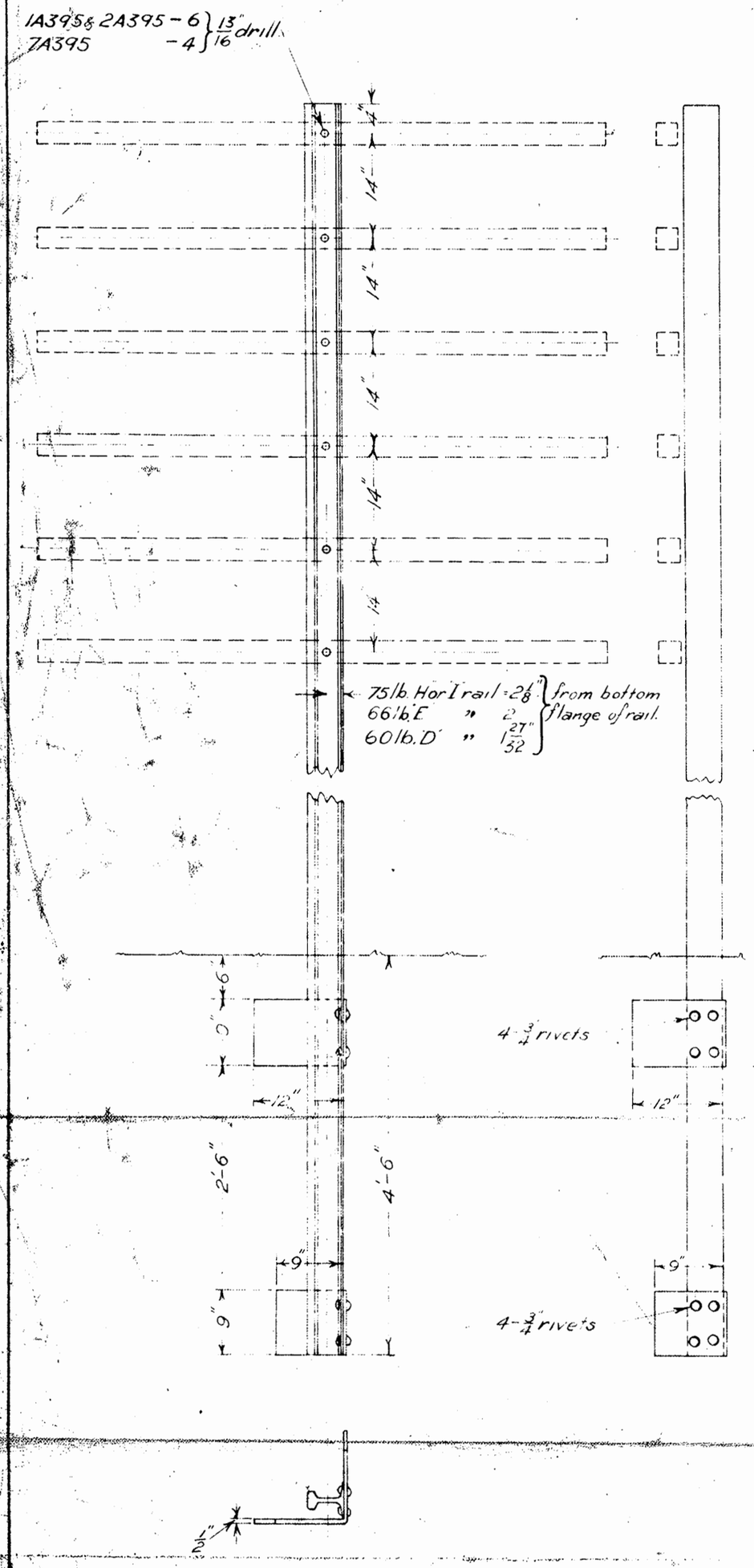

Overall Length of Pole.
Min. 20'-0"; Max. 25'-0" for 1A395 & 2A395
" 18'-0"; " 22'-0" " 7A395

60 lb. D rail 7A395
75 lb. H or I rail 2A395
66 " E " 1A395

21-4-25 TELEGRAPH POLE

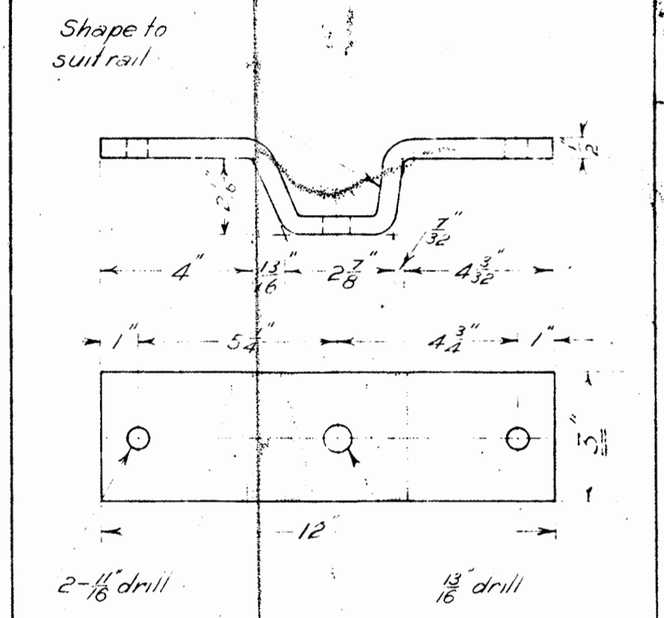

10-11-25 / Alt 125
21-4-25 ARM CARRIER 3A395

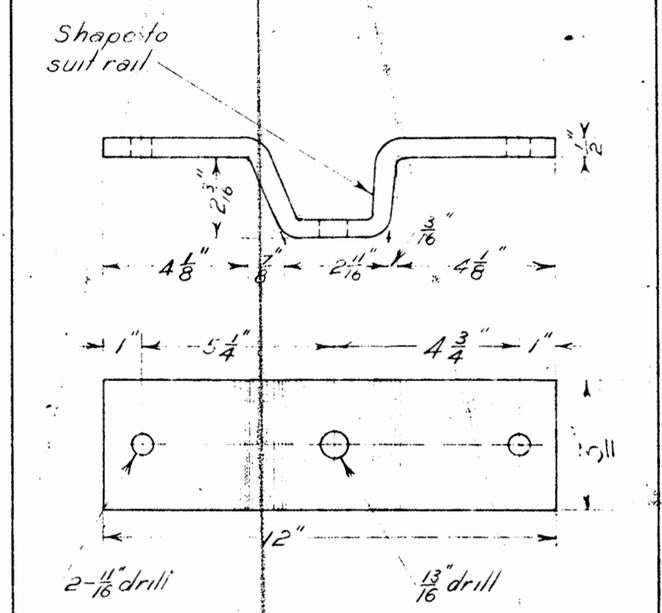

10-11-25 / Alt 125
21-4-25 ARM CARRIER 4A395

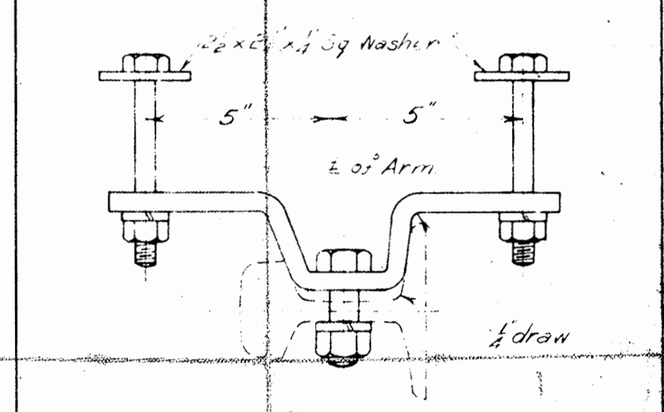

5A395
Carrier. Complete for 66 lb. E or 60 lb. D rails.
4A395. Supplied with:- 2-5/8 whit Bolts, length as ordered with Square Washer & Spring Washer.
1-3/4" whit Hex Hd Bolt 2 1/2" long & Spring Washer

6A395
Carrier. Complete for 75 lb H or I rails
3A395. Supplied with:- 2-5/8 whit Bolts, length as ordered with Square Washer & Spring Washer
1-3/4" whit Hex Hd Bolt 2 1/2" long & Spring Washer

17-7-25 / Alt No 107 6A395
21-4-25 ARM CARRIER (Complete) 5A395

A395

1	14-8-26 Part No 7A395 added	VICTORIAN RAILWAYS TELEGRAPH POLE 66 LB. E OR 75 LB. H OR I RAIL. OR 60 LB. D RAIL 21-4-25	Chief Eng of Sigs & Tels	Drawn by	Traced by L.J.P.

A395

1685 25

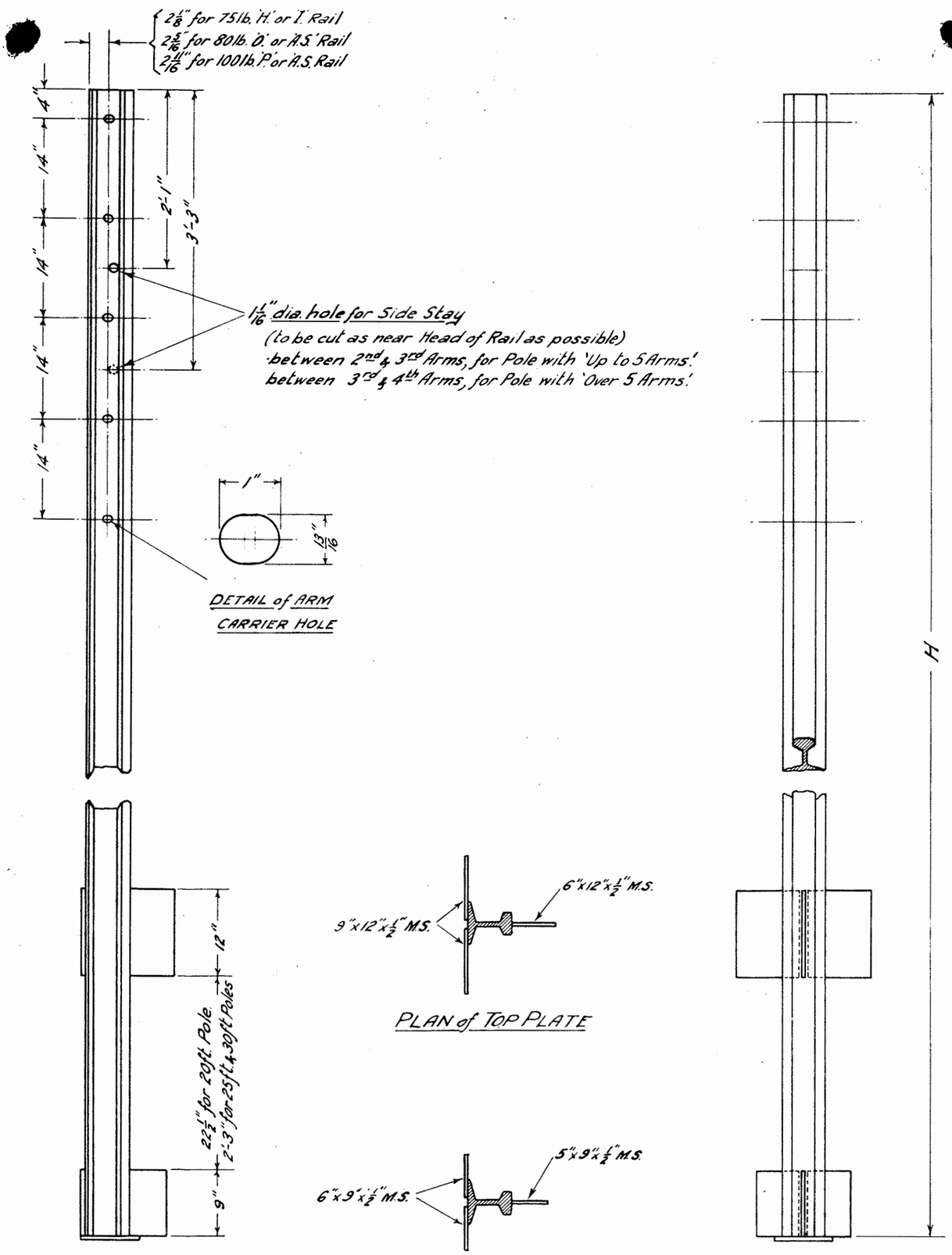

POLE as ordered	No of ARM CARRIER HOLES	No of ARM CARRIERS required	RAIL Length 'H'	RAIL CLASS. (either unless otherwise Specified)	ARM CARRIER PART No	PERMISSABLE No of ARMS (Pole Standard depth in ground) FOR STRENGTH of POLE 100 yd. Span	80 yd. Span	60 yd. Span	To allow Wire Clearance of 8'-0" above Level Ground (at 60°F)	Standard Depth of Pole in ground
20ft	to be specified	to be specified	20'-0" to 21'-0"	75lb. 'H' or 'I'	6A395	5	7	7	5	4'-6"
				80lb. 'O' or 'A.S.'	3F2211	6	8	8		
25ft	to be specified	to be specified	25'-0" to 26'-0"	80lb. 'O' or 'A.S.'	3F2211	4	5	8	9	5'-0"
				100lb. 'P' or 'A.S.'	2A375	6	8	12		
30ft	to be specified	to be specified	30'-0" to 31'-0"	80lb. 'O' or 'A.S.'	3F2211	3	4	6	13	5'-6"
				100lb. 'P' or 'A.S.'	2A375	5	6	8		

A587

VICTORIAN RAILWAYS

TELEGRAPH POLE (RAIL)

18-3-40

Sig. & Tel. Engineer	Drawn by	Traced by
	L.J.P.	L.J.P.

8
525

A587

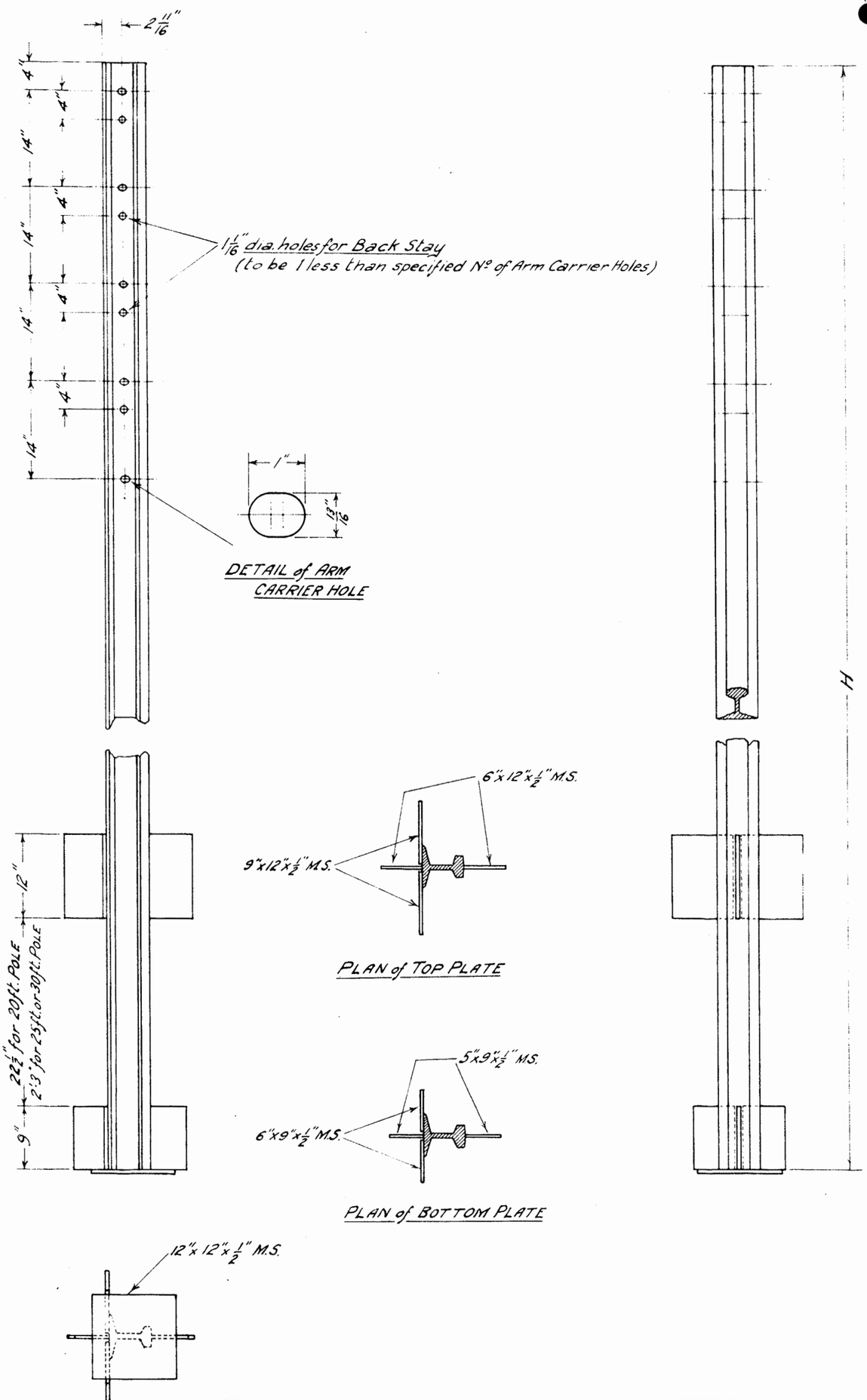

POLE as ordered	Nº of ARM CARRIER HOLES	Nº of ARM CARRIERS required	RAIL Length 'H'	RAIL CLASS (either unless otherwise specified)	ARM CARRIER PART Nº	PERMISSABLE Nº of ARMS 100 yd. Span	80 yd. Span	60 yd. Span	Depth of POLE in ground
20 ft.	to be specified	to be specified	20'-0" to 21'-0"	80 lb. 'O' or 'A.S.'	3F2211	—	5	5	5'-0"
				100 lb. 'P' or 'A.S.'	2A375	5	5	5	
25 ft.	to be specified	to be specified	25'-0" to 26'-0"	80 lb. 'O' or 'A.S.'	3F2211	—	4	5	5'-6"
				100 lb. 'P' or 'A.S.'	2A375	6	8	9	
30 ft.	to be specified	to be specified	30'-0" to 31'-0"	80 lb. 'O' or 'A.S.'	3F2211	—	3	4	6'-0"
				100 lb. 'P' or 'A.S.'	2A375	5	6	8	

A588

VICTORIAN RAILWAYS

TELEGRAPH TERMINAL POLE (RAIL)

18-3-40

Sig. & Tel. Engineer	Drawn by L.J.P.	Traced by L.J.P.
[signature]	[signature] 7/4/6	1 555

A 588

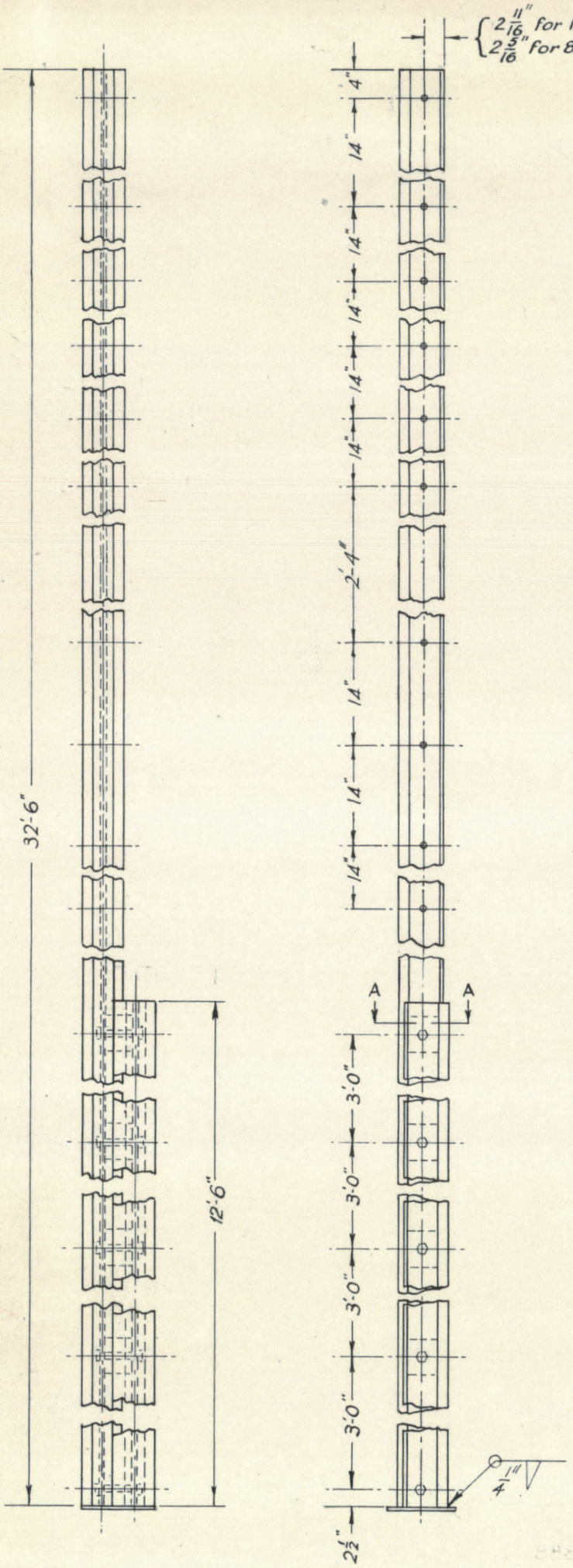

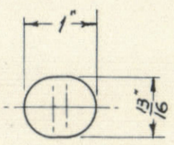

Detail of Arm Carrier Holes.

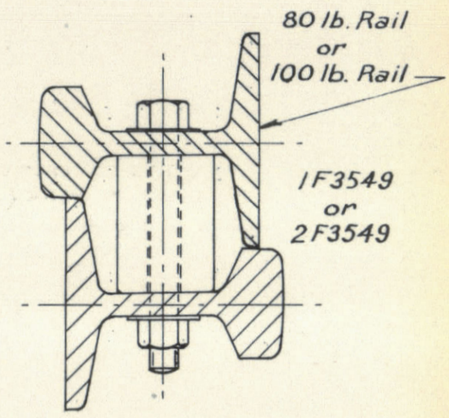

ALTERNATIVE PLAN - Section AA.

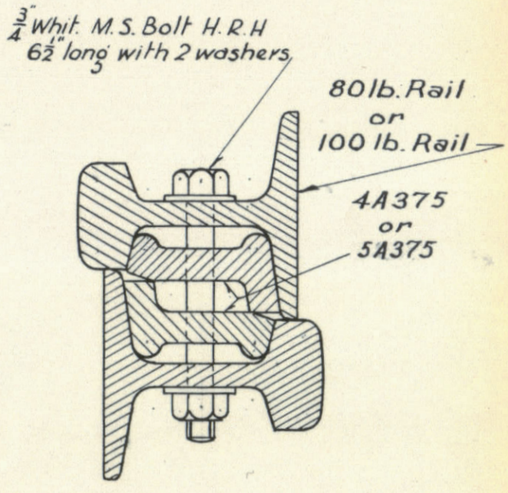

Enlarged View Section A-A

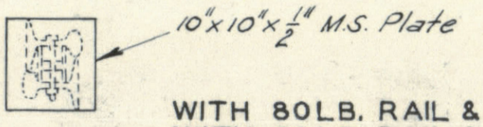

80 lb. 'O' or 'A.S.' RAIL FOR TELEGRAPH
100 lb. 'P' or 'AS' RAIL FOR HIGH TENSION
POLE 32'-6"

WITH 80 LB. RAIL & 4A375 } 2A1128
WITH 80 LB. RAIL & 2F3549 }
WITH 100 LB. RAIL & 5A375 } 1A1128
WITH 100 LB. RAIL & 1F3549 }

A1128

Alteration No. 1312 21-9-67	Alteration No. 1116 15-8-62	Redrawn, cross-arm holes re-arranged. Title previously - "POLE (RAIL) FOR HIGH TENSION TRANSMISSION" Originally dated 10-3-54 Alteration 904 added	

VICTORIAN RAILWAYS

POLE

(RAIL)

FOR HIGH TENSION TRANSMISSION OR TELEGRAPH.

20-8-56

SIG & TEL ENGINEER	DRAWN BY	TRACED BY
	S.R.M.	S.R.M.

A1128

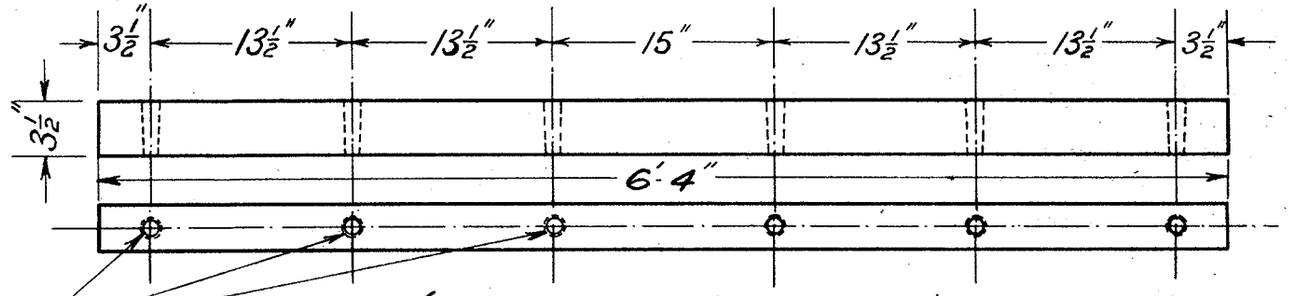

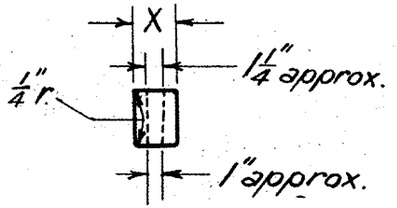

* See Note below

(Seasoned Ironbark or Grey Box)

CROSS ARM 6 WAY

20-5-24

X = 2½" to 2⅝" 2F1412
X = 3" 1F1412

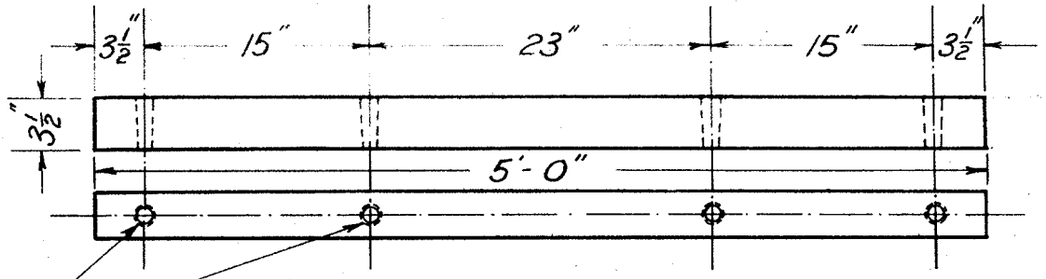

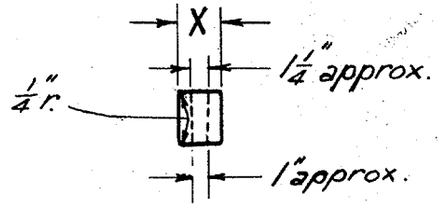

* See Note below

(Seasoned Ironbark or Grey Box)

CROSS ARM 4 WAY

20-5-24

X = 2½" to 2⅝" 4F1412
X = 3" 3F1412

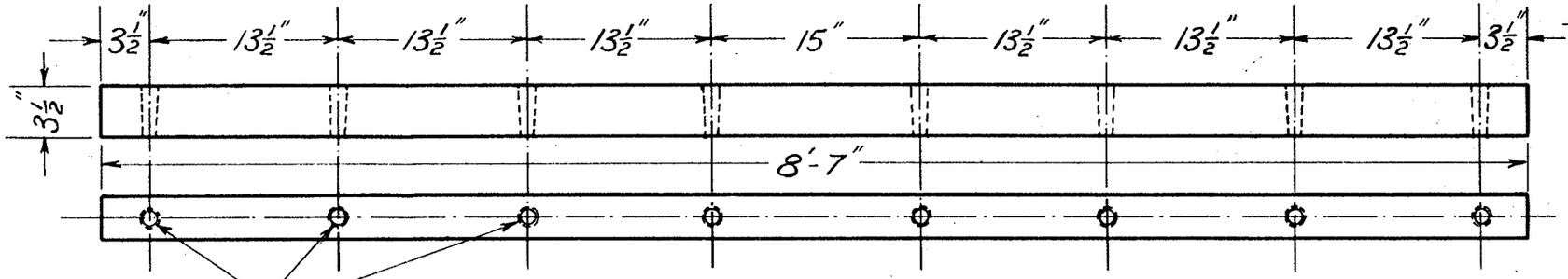

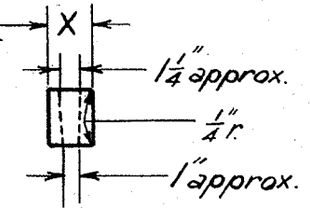

* See Note below

(Seasoned Ironbark or Grey Box)

CROSS ARM 8 WAY

20-5-24

X = 2½" to 2⅝" 6F1412
X = 3" 5F1412

* Insulator holes taper bored to Standard gauge provided by the Chief Engr of Signals & Telegraphs. Dimensions cover finished material after machine dressing.

Redrawn - Original under same title dated 1-12-22 - Parts 5F1412 & 6F1412 added.

VICTORIAN RAILWAYS
CROSS ARMS
FOR
TELEGRAPH POLES 20-5-24

Chief Engr of Sigs & Tels.

Drawn by R.G.C.

Traced by R.G.C.

8-5-29

F1412

1818-24

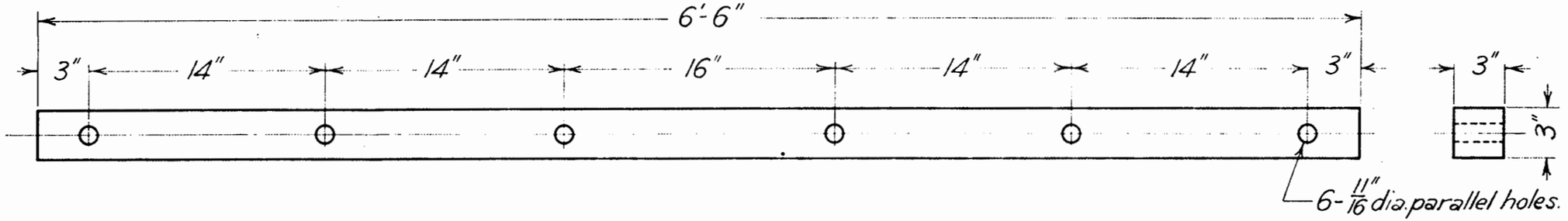

11-10-27. **P.M.G. TYPE CROSS ARM** Seasoned Messmate or Stringybark. **1F1464**

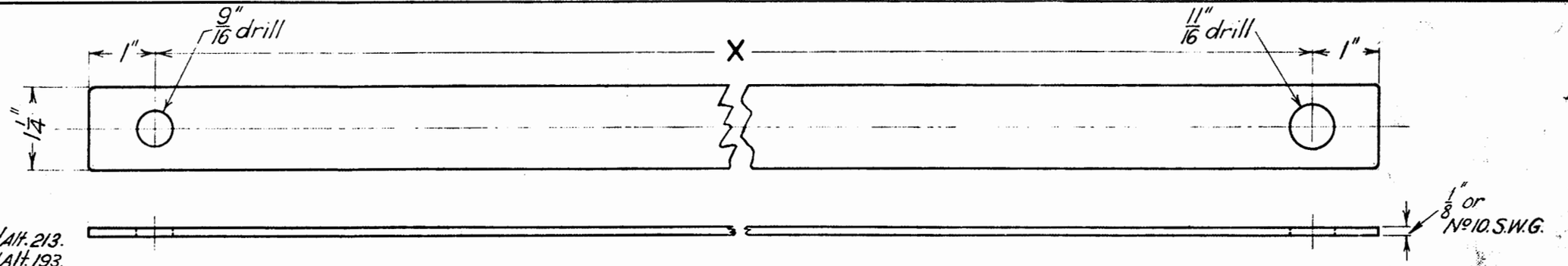

22-12-28 / Alt. 213.
11-2-28 / Alt. 193.
19-12-27 / Alt. 190
11-10-27 / Alt 187.
7-8-26 / Alt. 149.

BRACE M.S. Galvanized.

X = 2-2" — 4F1464
X = 18" — 2F1464

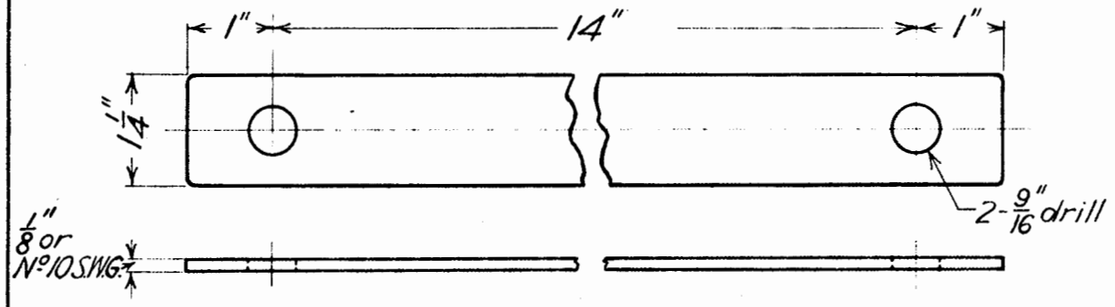

19-12-27 **BRACE** M.S. Galvanized. **3F1464**

	1 19-12-27 Part No 3F1464 added and Alt No 190. E.C.M.	Redrawn. Previously under same No & title dated 23-2-23.	V.R. CROSS ARM & BRACE FOR TELEGRAPH POLE 11-10-27.	Chief Engr Sigs. & Tels.	Drawn by E.C.M.	Traced by E.C.M. F1464

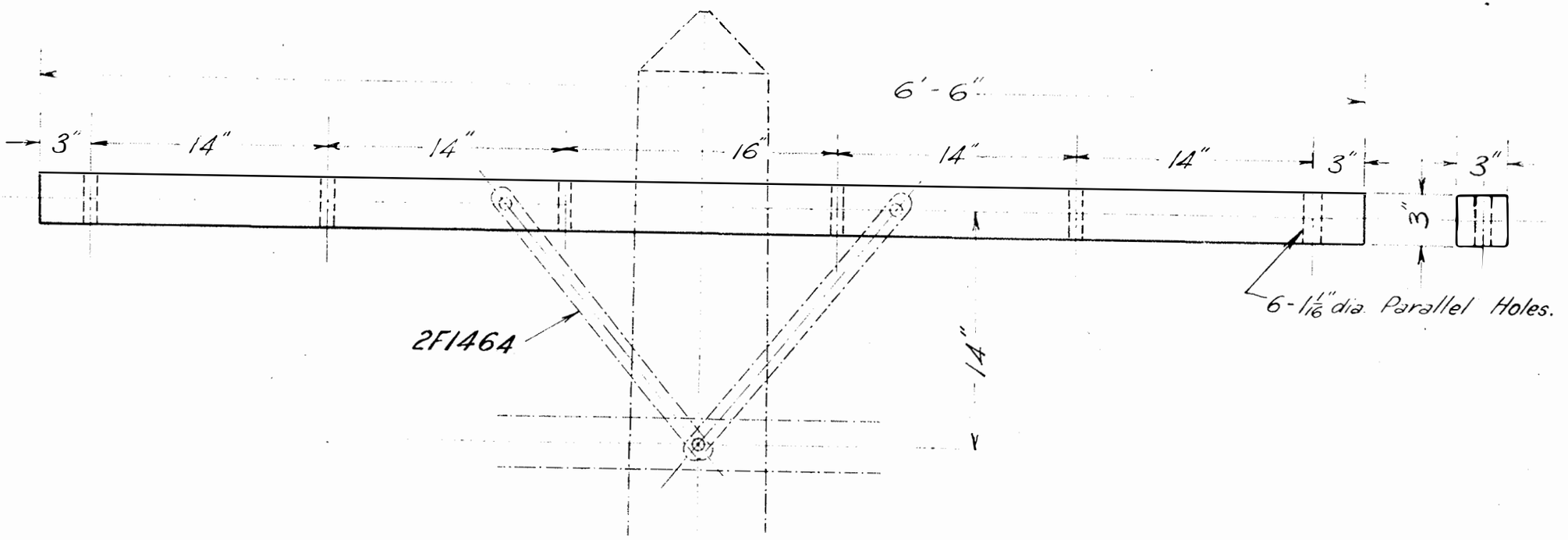

23-2-23

Cross Arm (Seasoned Messmate or Stringybark)

1F1464

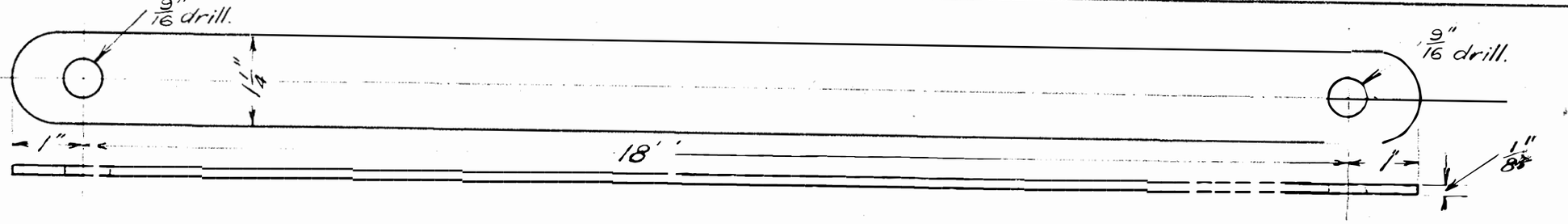

23-2-23

Brace M.S.

2F1464

	V.R. Cross Arm and Brace for Telegraph Pole P.M.G. Type 23-2-23	Chief Eng. of Sigs & Tels	Drawn by R.G.C.	Traced by R.G.C.	F1464

K1037
a1.47

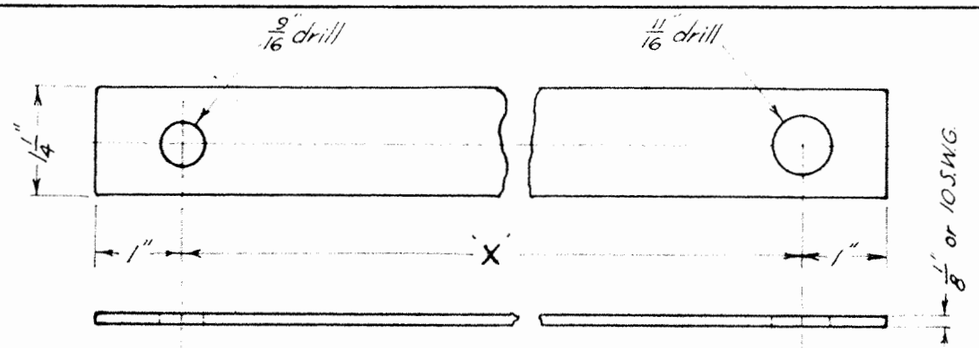

M.S. (Galvanized)
BRACE

X = 2'-2" — 4F1464
X = 18" — 2F1464

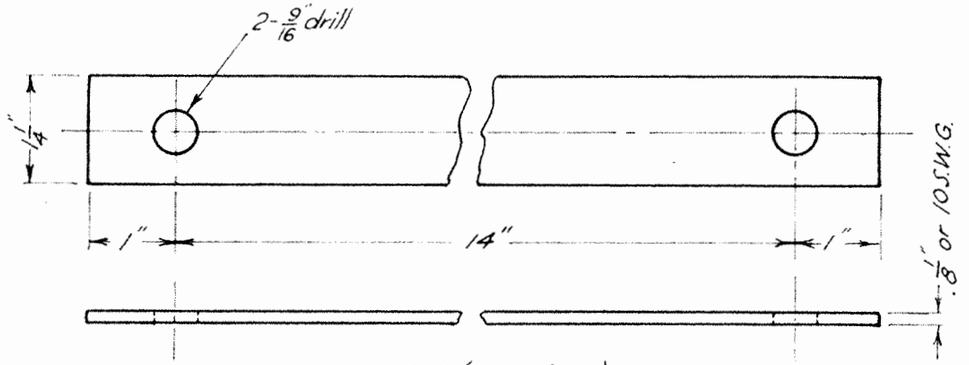

M.S. (Galvanized)
BRACE
3F1464

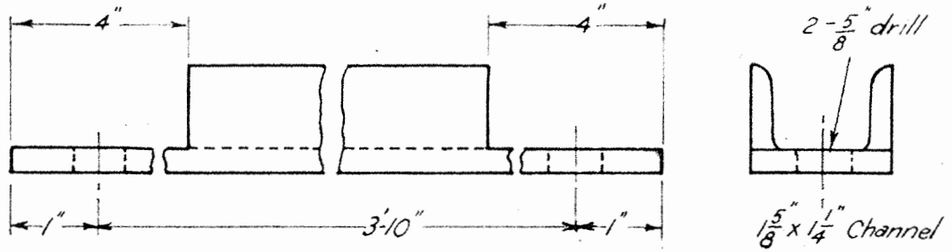

M.S.
BRACE
12F1464

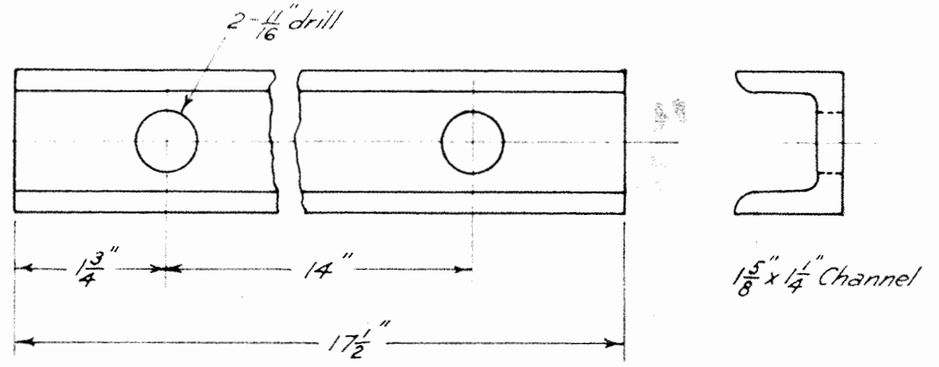

M.S.
BRACE
FOR 2 CROSSARMS — 5F1464

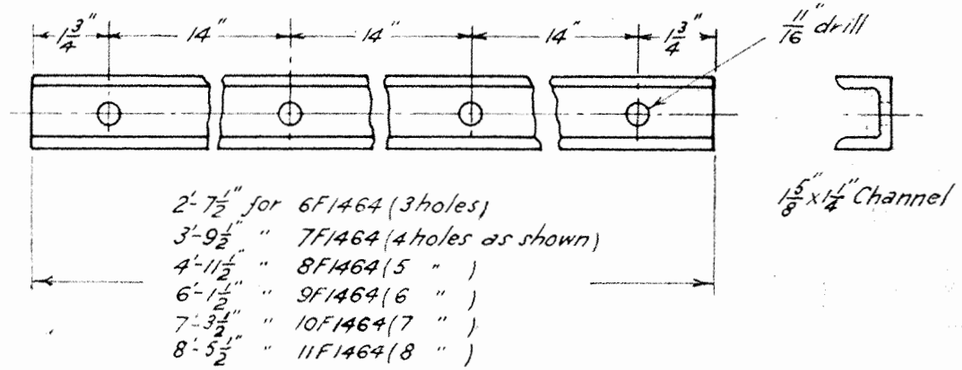

2'-7 1/2" for 6F1464 (3 holes)
3'-9 1/2" " 7F1464 (4 holes as shown)
4'-11 1/2" " 8F1464 (5 ")
6'-1 1/2" " 9F1464 (6 ")
7'-3 1/2" " 10F1464 (7 ")
8'-5 1/2" " 11F1464 (8 ")

M.S.
BRACE

FOR 8 CROSSARMS — 11F1464
" 7 " " — 10F1464
" 6 " " — 9F1464
" 5 " " — 8F1464
" 4 " " — 7F1464
" 3 " " — 6F1464

SPARE
Copy

Redrawn Part N° 12F1464 added
Original under same title
dated 4-5-42

V.R. TELEGRAPH LINE
FITTINGS
CROSSARM BRACES 16-7-48

Sig. & Tel. Engineer

Drawn by L.J.P.

Traced by J.R.McC.

106

F1464

1038
a 1 47

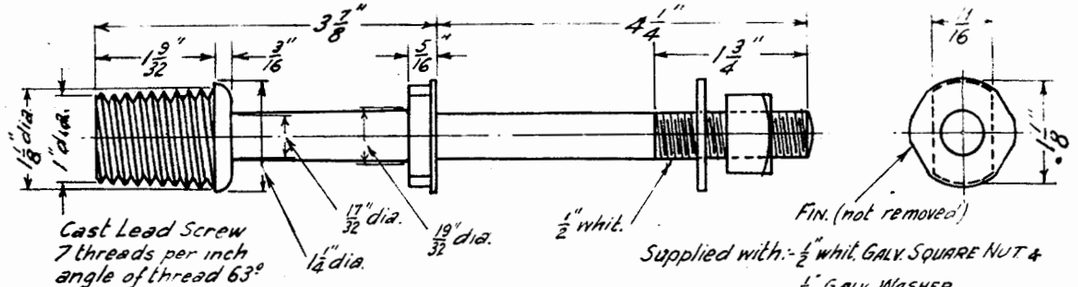

M S GALVANIZED
SPINDLE ('B' PATTERN)

11-8-41 — 10F1465

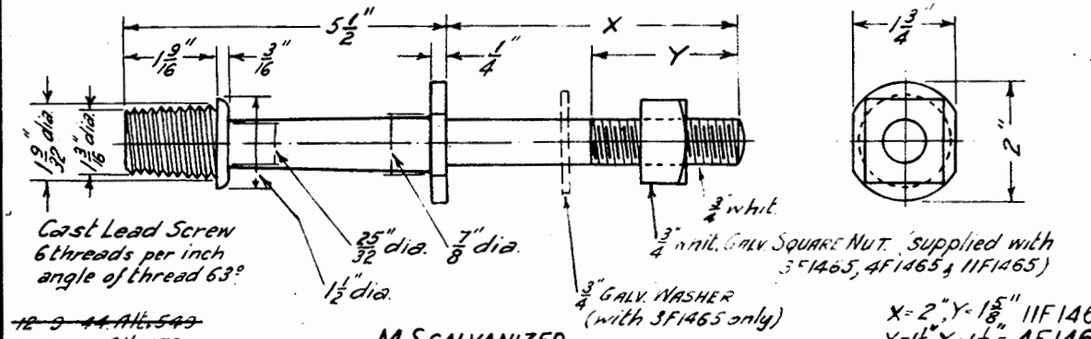

~~12-9-41 Alt. 543~~
21-8-41. Alt. 479
11-8-41

M.S. GALVANIZED
SPINDLE ('A' PATTERN)

X = 2" Y = 1 5/8" 11F1465
X = 1 1/2" Y = 1 1/8" - 4F1465
X = 5" Y = 2 1/2" - 3F1465

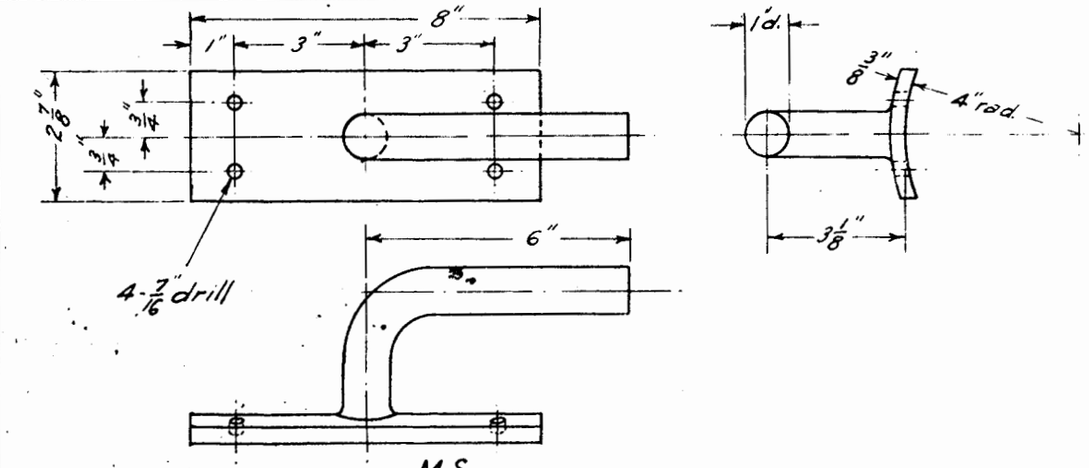

11-8-41

M.S.
SIDE BRACKET ('A' or 'B' PATTERN)

1F1465

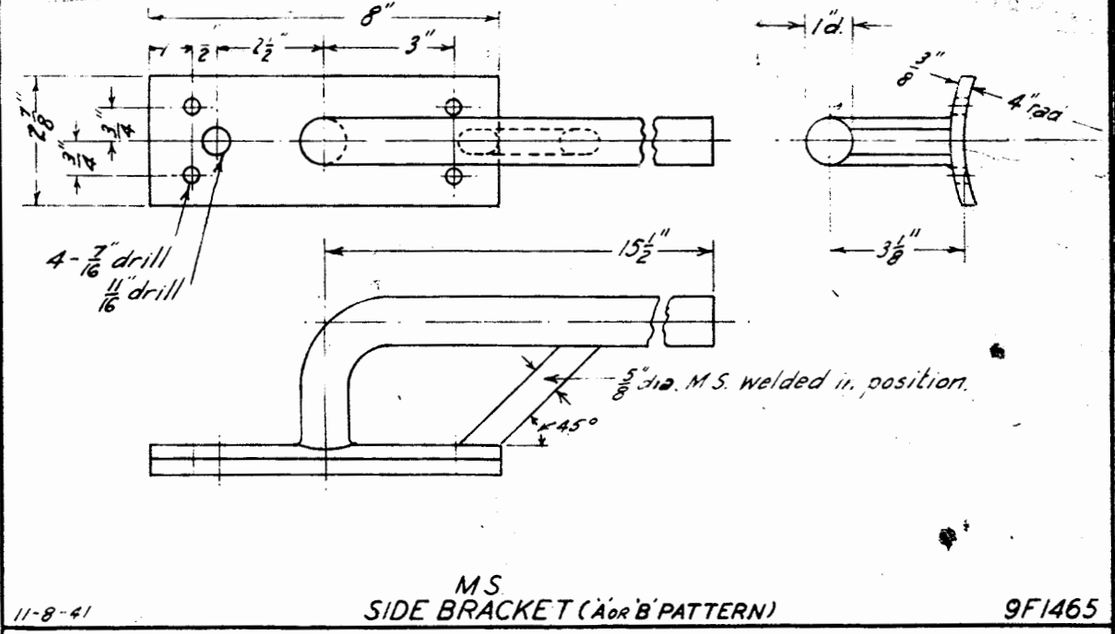

11-8-41

M S
SIDE BRACKET ('A' or 'B' PATTERN)

9F1465

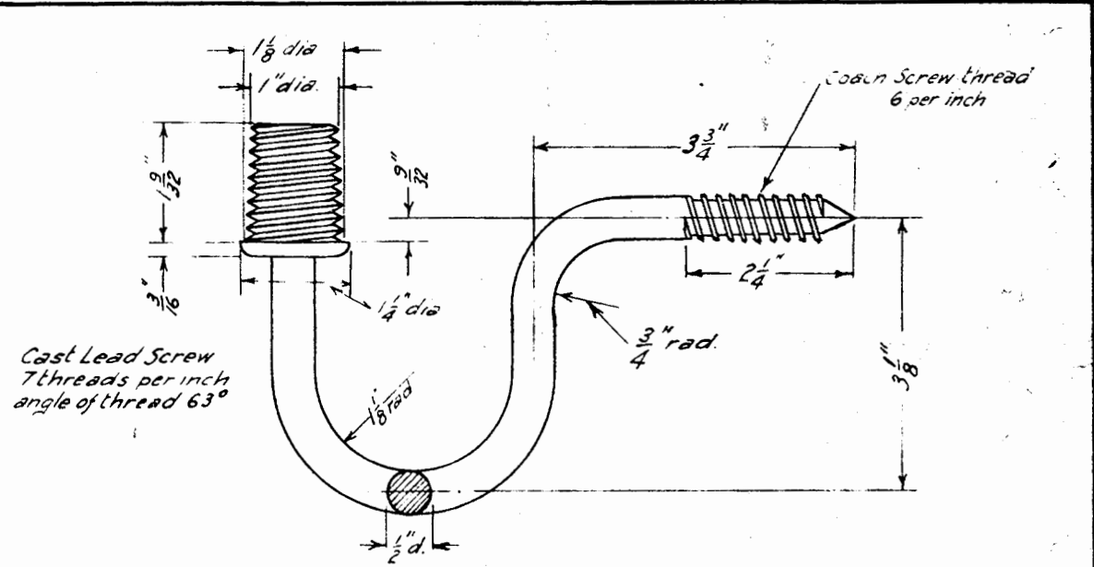

21-8-41 Alt. 479
11-8-41

M S GALVANIZED
SPINDLE - SWAN NECK ('B' PATTERN)

5F1465

	1 18-4-45 Alteration 549 cancelled Part 11F1465 added	REDRAWN. including alteration N°58 Parts 2, 6, 7 & 8F1465 cancelled. Part 10F1465 added. Original under TITLE "Telegraph Line Fittings"	VR TELEGRAPH LINE FITTINGS SPINDLES & SIDE BRACKETS 11 8 41	Sig & Tel. Engineer	Drawn by L.J.P.	Traced by L.J.P.	F1465

1041
a 1 48

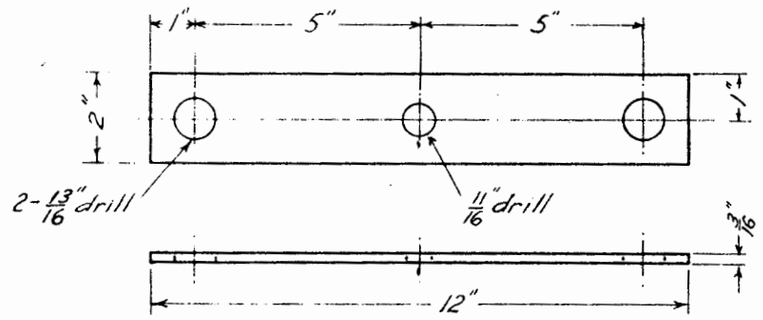

24.10.55 / ALT 874
15-4-42 / Alt. 499

M.S. (Galvanized)
PLATE

1F1469

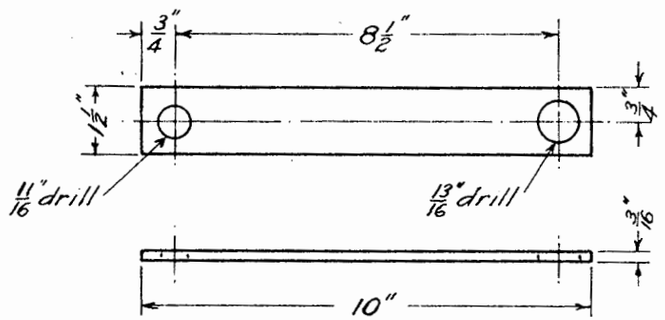

24.10.55/ALT. 874
15-4-42/Alt. 499

M.S. (Galvanized)
STRAP

2F1469

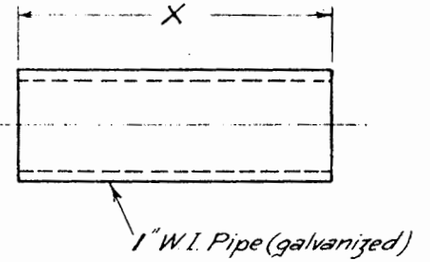

15-4-42

FERRULE

X = 3"-7F1469
X = 3 1/2"-3F1469

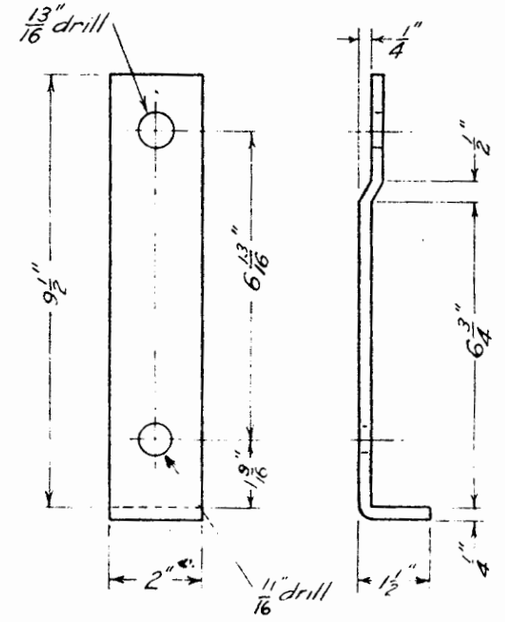

24.10.55/ALT. 874.
15-4-42

M.S. (Galvanized)
PLATE

8F1469

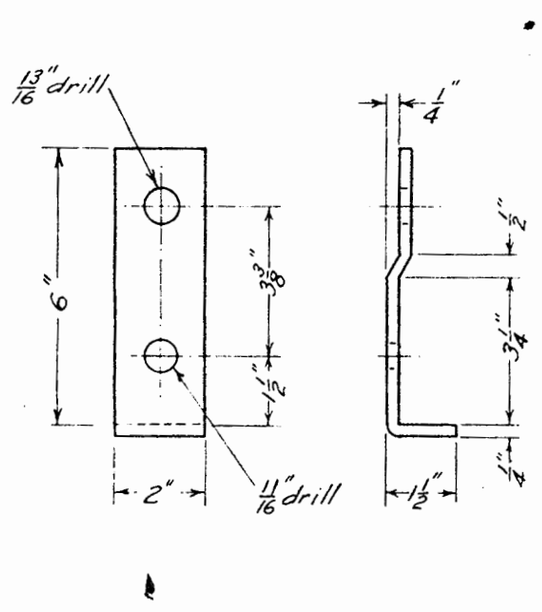

24.10.55/ALT. 874.
15-4-42

M.S. (Galvanized)
PLATE

9F1469

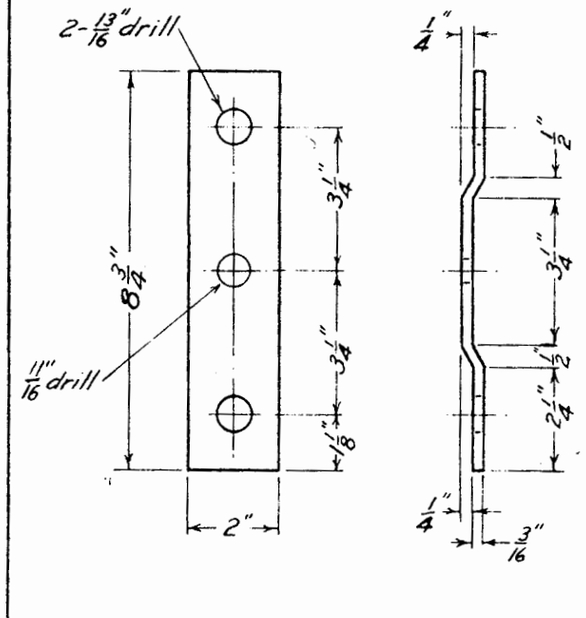

24.10.55. / ALT. 874.
15-4-42

M.S. (Galvanized)
PLATE

10F1469

REDRAWN. Including Alterations 132, 136 & 172
Original under Title "Telegraph Line Fittings"
dated 28-2-23. Parts N° 4, 5 & 6 F1469 cancelled
Parts N° 7, 8, 9 & 10 F1469 added.

V.R. TELEGRAPH LINE FITTINGS
TRANSPOSITION & TERMINATING BRACKETS
DETAILS

15-4-42

Sig. & Tel. Engineer

Drawn by L.J.P.

Traced by L.J.P.

337/74

F1469

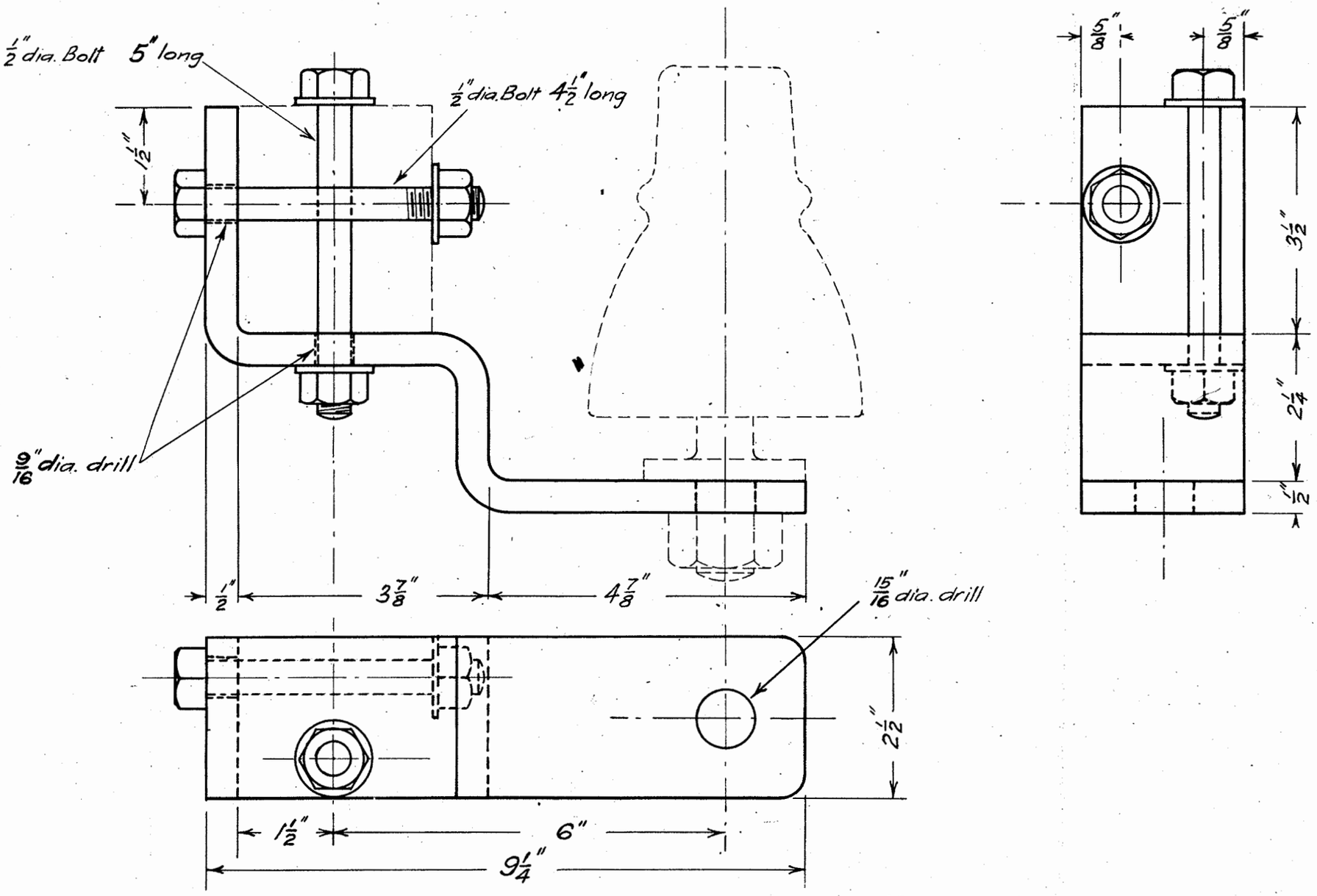

30-5-23

TERMINATING BRACKET (FOR A INSULATORS) W.I.

2896-23

1F1508

V. R.

TELEGRAPH LINE FITTINGS

Chief Engr. of Sigs. & Tels.

Drawn by S.C.O.

Traced by S.C.O.

SSW 6

F1508

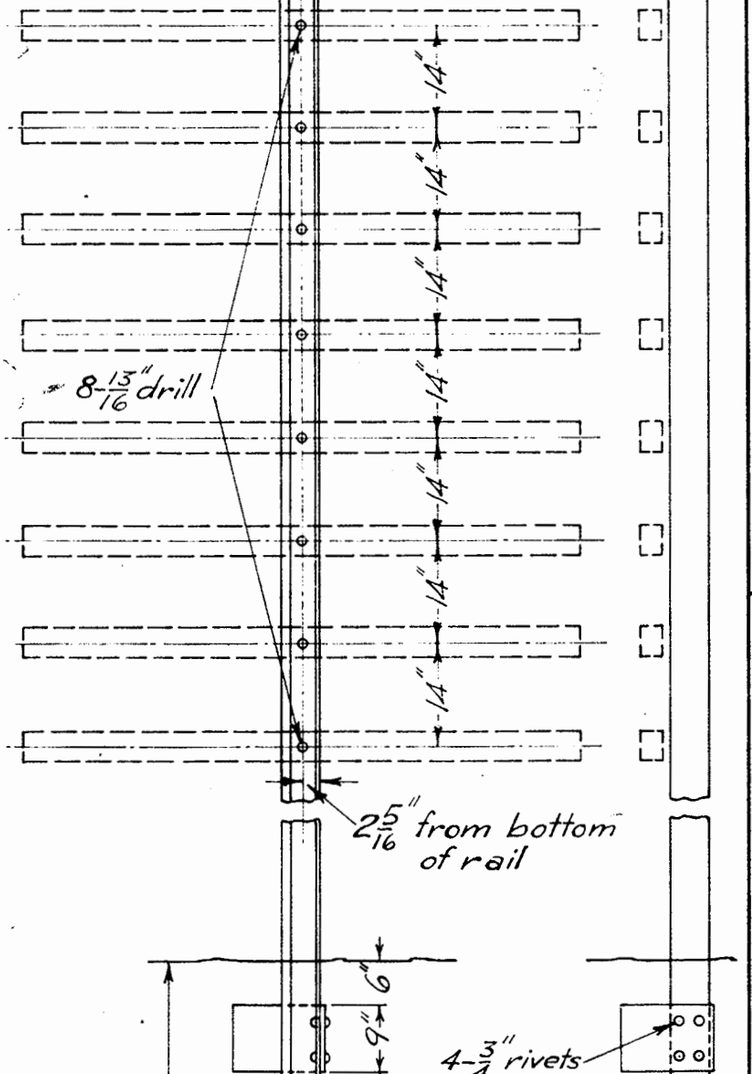

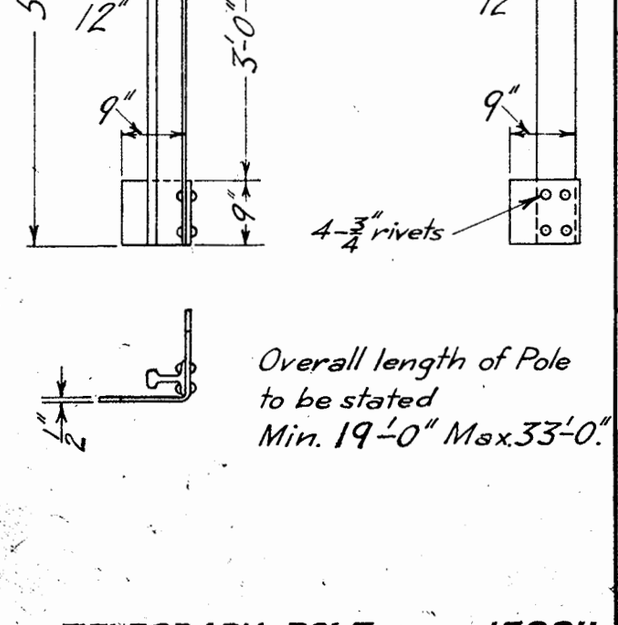



Overall length of Pole to be stated
Min. 19'-0" Max. 33'-0"

14·4·26 TELEGRAPH POLE 1F2211

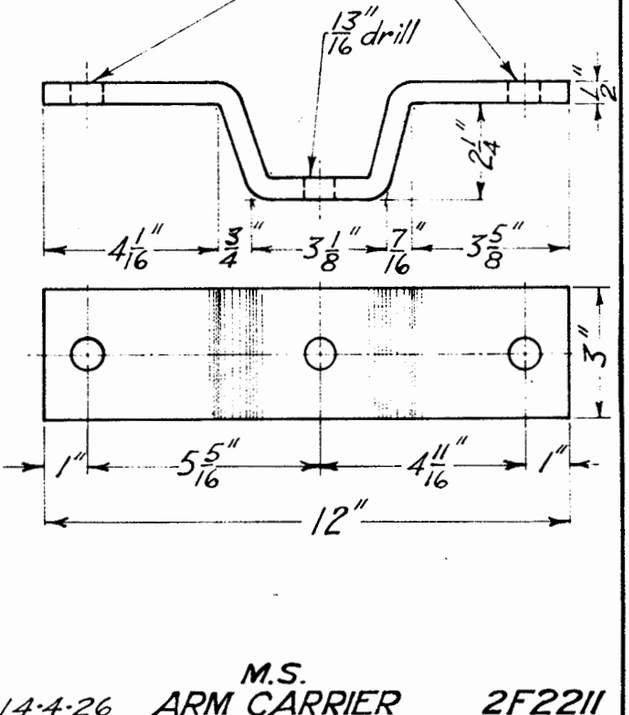

M.S.
14·4·26 ARM CARRIER 2F2211

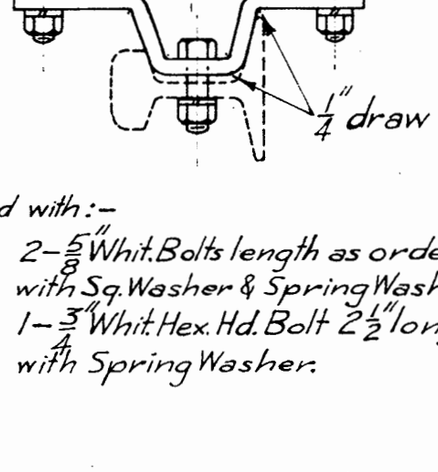

Supplied with:-
2-5/8" Whit. Bolts length as ordered with Sq. Washer & Spring Washer.
1-3/4" Whit. Hex. Hd. Bolt 2 1/2" long with Spring Washer.

14·4·26 ARM CARRIER Complete 3F2211

1275.26

F2211

V.R. TELEGRAPH POLE
80LB "O" RAIL
14·4·26

Drawn by E.A. | Traced by E.A.

Chief Eng Bgs&Tels

F2211

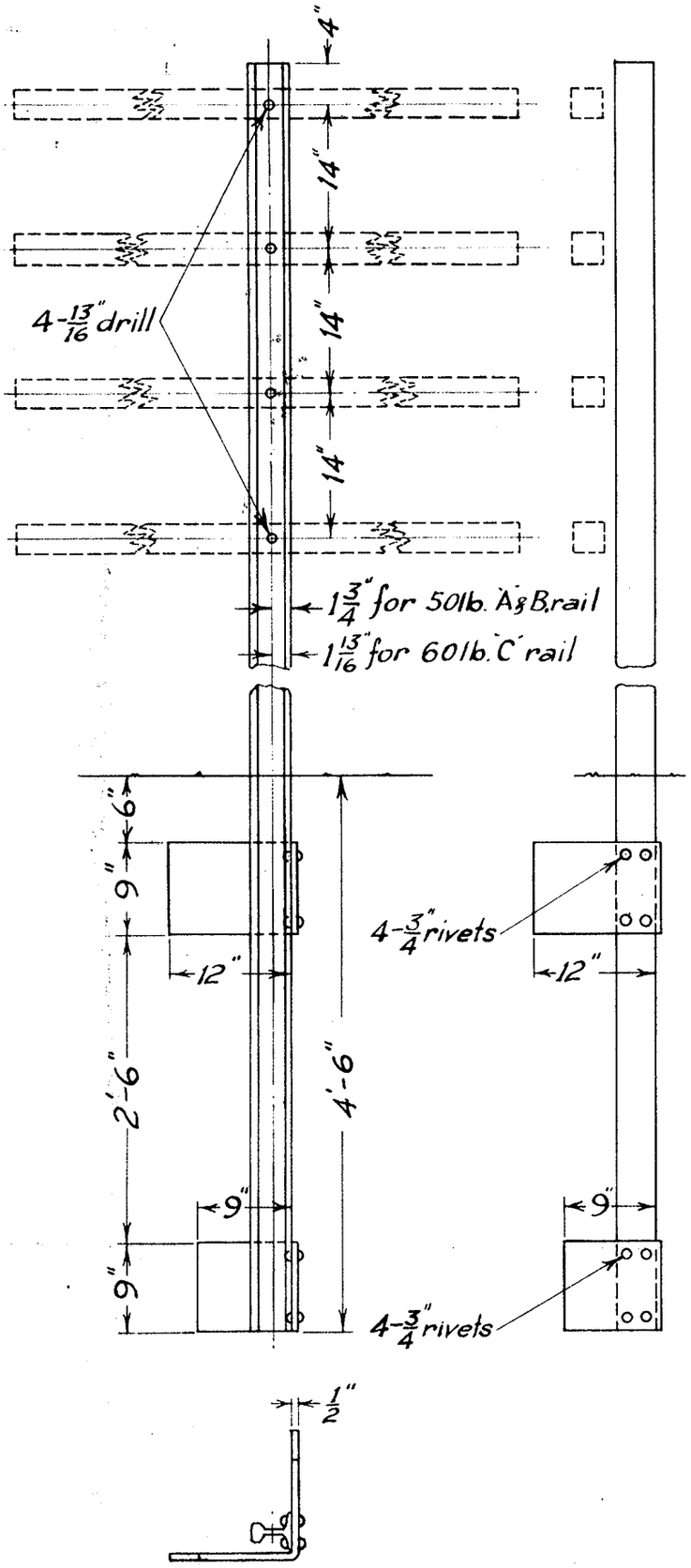

Overall length of Pole.
Min. 18'-0"; Max. 22'-0"

14-8-26 TELEGRAPH POLE 1F2246

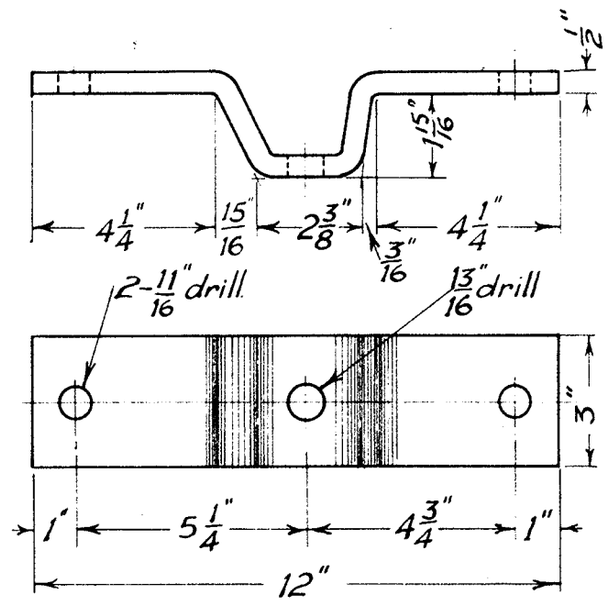

M.S.
14-8-26 ARM CARRIER 2F2246

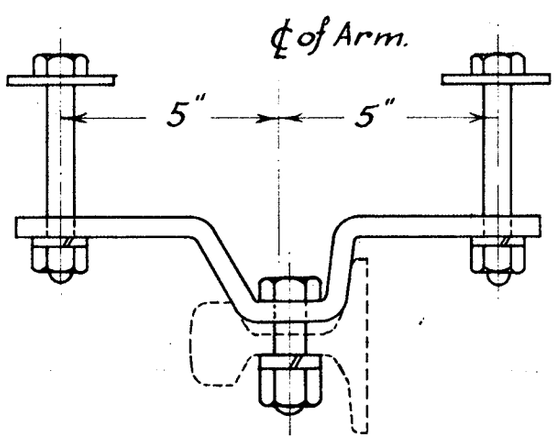

Supplied with:-
2-5/8" Whit. Bolts, length as ordered, with Sq. Washer & Spring Washer.
1-3/4" Whit. Hex. Hd. Bolt, 2 1/2" long & Spring Washer.

14-8-26 ARM CARRIER (Complete) 3F2246

F2246

V.R. TELEGRAPH POLE
50 LB. A OR B. OR 60 LB. C RAIL
14-8-26.

Drawn by L.J.P. | Traced by L.J.P.

Chief Eng. Sigs. & Tels.

Book 33

F2246

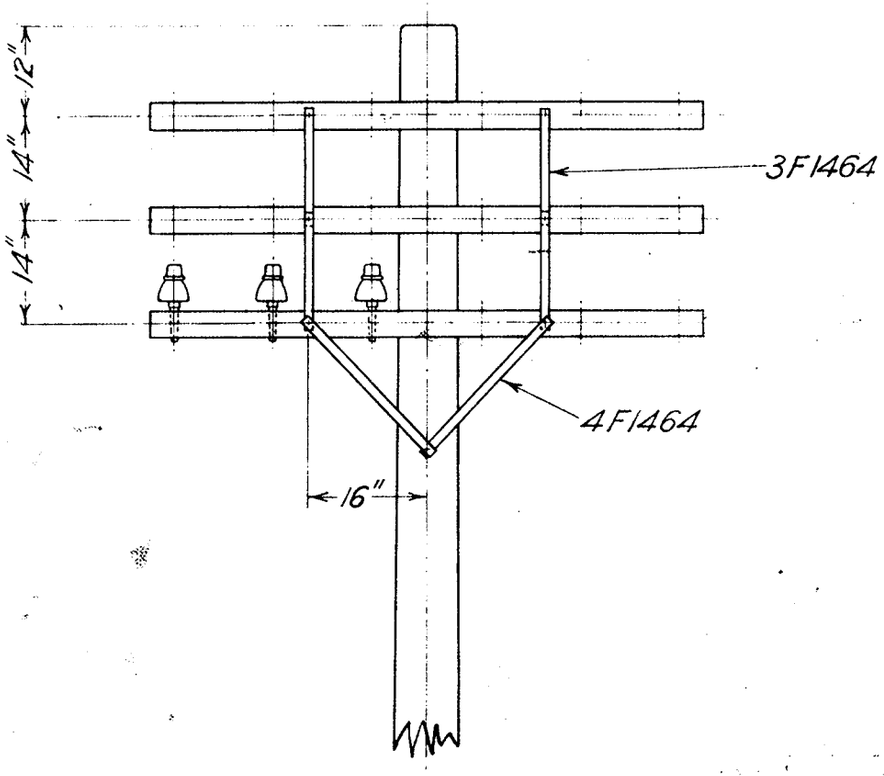

10-2-28

METHOD "A"

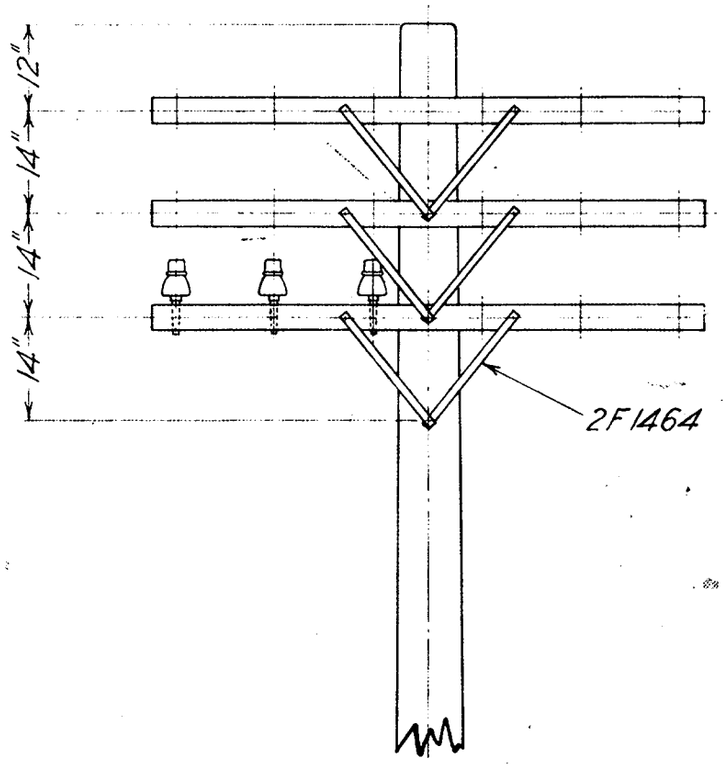

10-2-28

METHOD "B"

V.R. CROSS ARMS ON TELEGRAPH POLE METHODS OF BRACING 10-2-28

Chief Engr. Sigs. & Tels.	Drawn by E.C.M.	Traced by E.C.M.

F2388

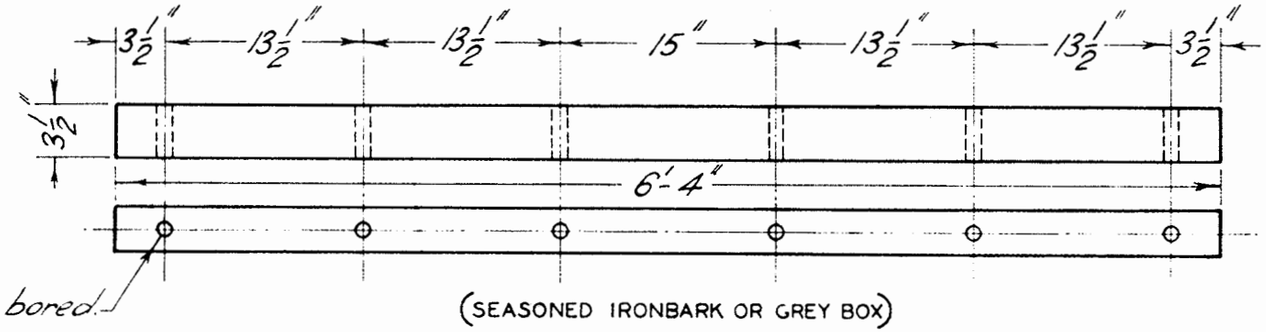

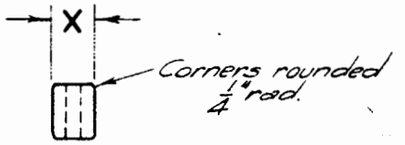

8-8-29/ALT 232.
10-11-28

(SEASONED IRONBARK OR GREY BOX)

CROSS ARM 6 WAY

X = 2½" to 2⅝" 2F2460
X = 3" 1F2460

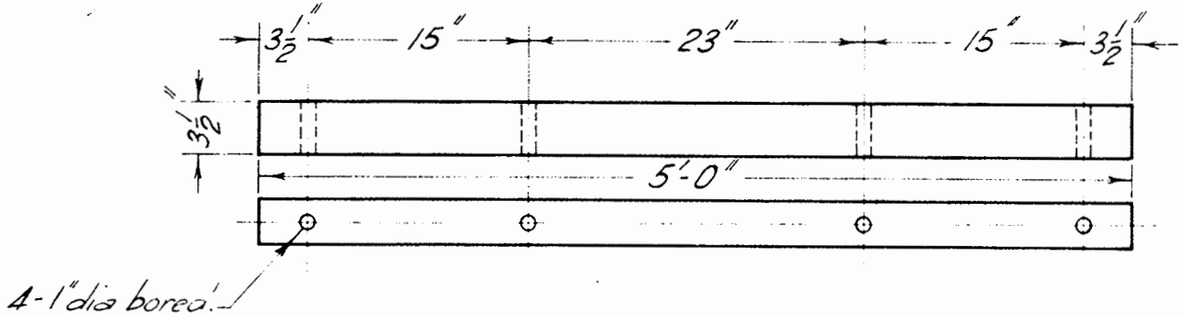

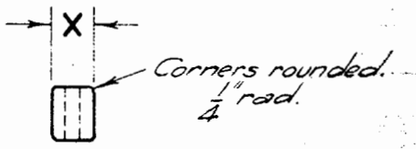

10-11-28

(SEASONED IRONBARK OR GREY BOX)

CROSS ARM 4 WAY

CANCELLED ~~X = 2½" to 2⅝" 4F2460~~
~~X = 3" 3F2460~~

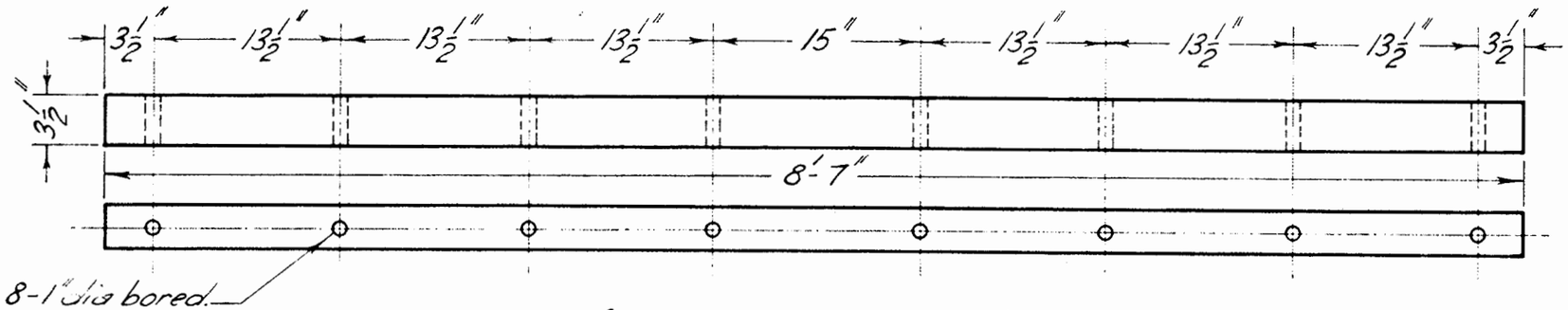

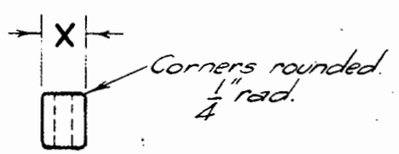

10-11-28

(SEASONED IRONBARK OR GREY BOX)

CROSS ARM 8 WAY

CANCELLED ~~X = 2½" to 2⅝" 6F2460~~
~~X = 3" 5F2460~~

	8-8-29. PARTS 3,4,5,& 6 CANCELLED.	10-11-28 SUPERSEDES F1412	V.R. CROSS ARMS FOR TELEGRAPH POLES 10-11-28	CHIEF ENGR SIGS. & TELS	DRAWN BY W.J.K	TRACED BY W.J.K	F2460

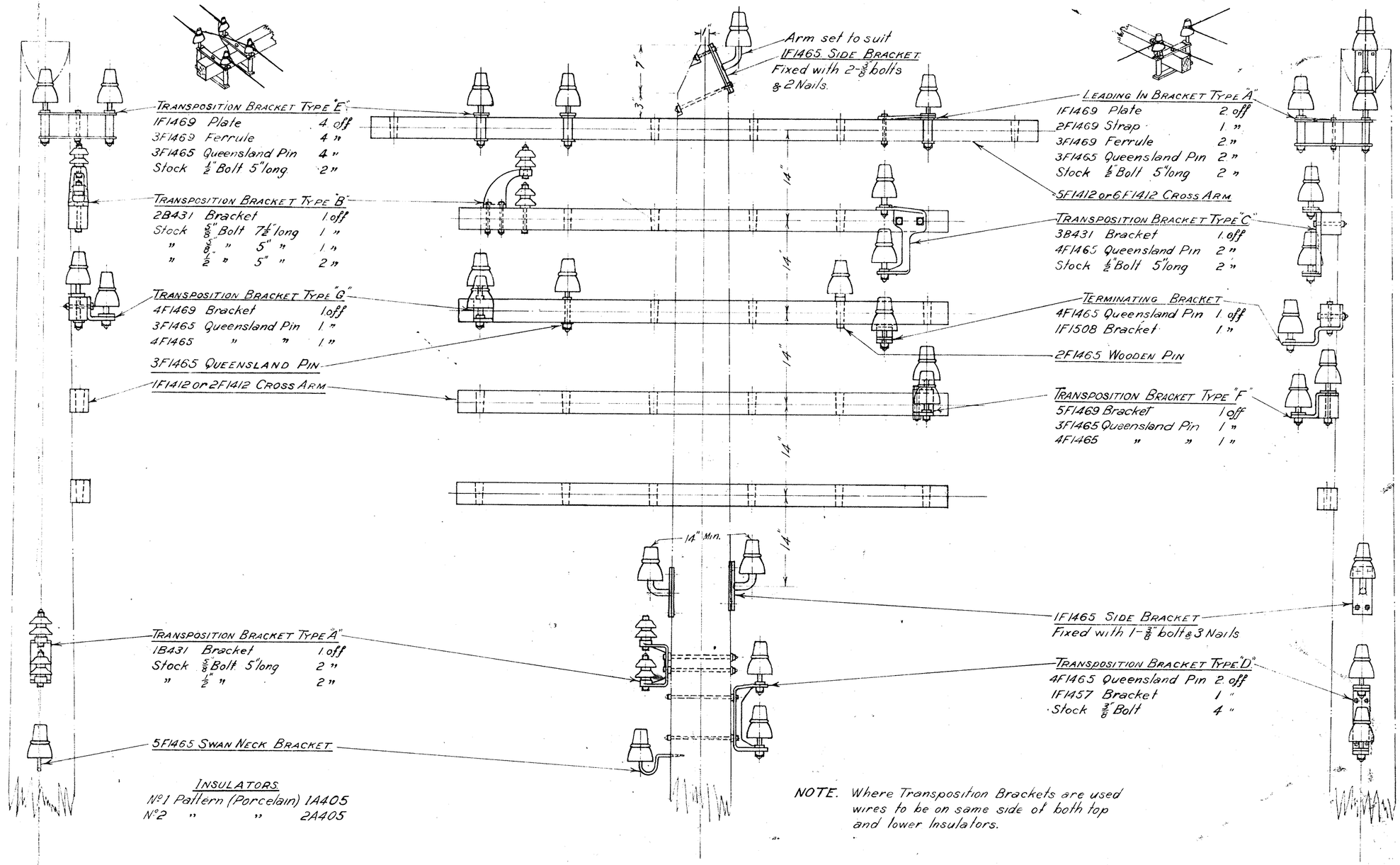

Transposition Bracket Type "E"

1F1469	Plate	4 off
3F1469	Ferrule	4 "
3F1465	Queensland Pin	4 "
Stock	½" Bolt 5" long	2 "

Transposition Bracket Type "B"

2B431	Bracket	1 off
Stock	⅝" Bolt 7½" long	1 "
"	⅝" " 5" "	1 "
"	½ " 5" "	2 "

Transposition Bracket Type "G"

4F1469	Bracket	1 off
3F1465	Queensland Pin	1 "
4F1465	" "	1 "

Leading In Bracket Type "A"

1F1469	Plate	2 off
2F1469	Strap	1 "
3F1469	Ferrule	2 "
3F1465	Queensland Pin	2 "
Stock	½" Bolt 5" long	2 "

Transposition Bracket Type "C"

3B431	Bracket	1 off
4F1465	Queensland Pin	2 "
Stock	½" Bolt 5" long	2 "

Terminating Bracket

4F1465	Queensland Pin	1 off
1F1508	Bracket	1 "

Transposition Bracket Type "F"

5F1469	Bracket	1 off
3F1465	Queensland Pin	1 "
4F1465	" "	1 "

Transposition Bracket Type "A"

1B431	Bracket	1 off
Stock	⅝ Bolt 5" long	2 "
"	½ "	2 "

Transposition Bracket Type "D"

4F1465	Queensland Pin	2 off
1F1457	Bracket	1 "
Stock	⅜ Bolt	4 "

Insulators

N°1	Pattern (Porcelain)	1A405
N°2	" "	2A405

NOTE. Where Transposition Brackets are used wires to be on same side of both top and lower Insulators.

11-4-27 Transposition Brackets Types F & G Revised. KOHC	5-5-25 This Drawing Supersedes Drawings F1463 & F1816.	VICTORIAN RAILWAYS TELEGRAPH LINE FITTINGS ASSEMBLY (shown on Wedge Topped Timber Pole) 5-5-25	Chief Eng of Sigs & Tels	Drawn by LJP	Traced by LJP
					H359

1785

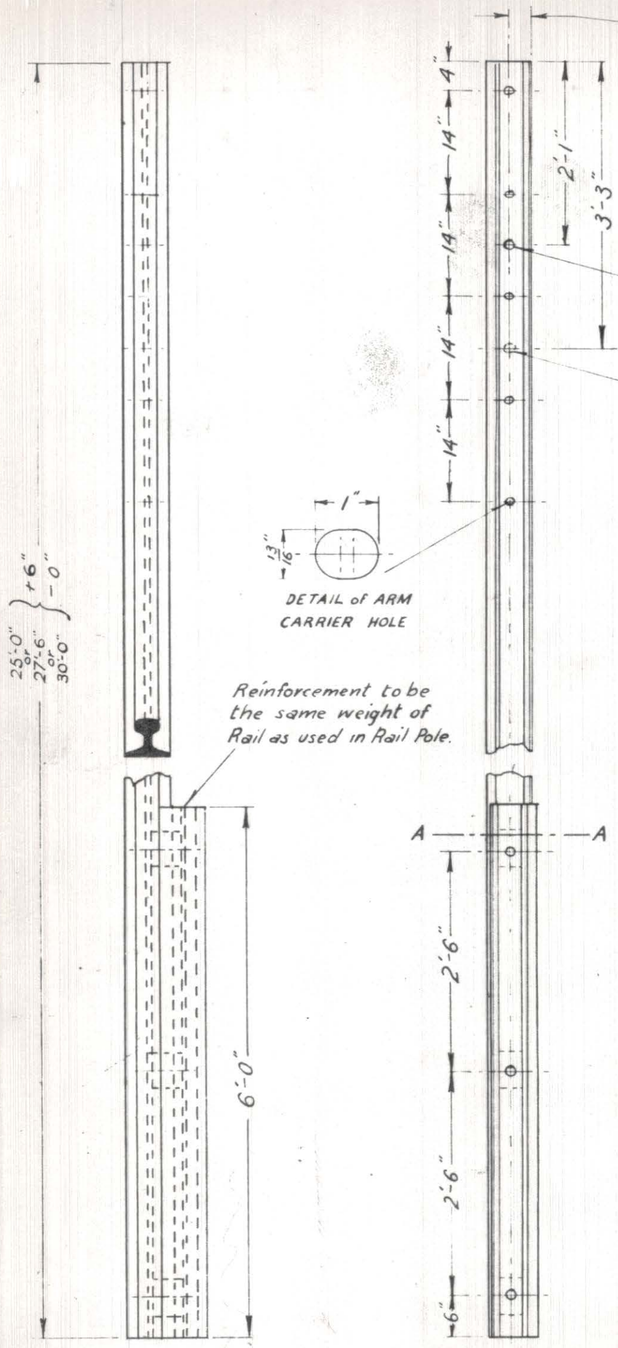

ARM CARRIERS

3F2211 - 80lb. "O" or "A.S." Rail.
2A375 - 100lb "P" or "A.S." Rail.

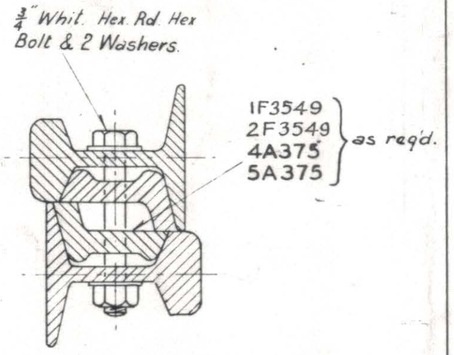

PLAN - Section. A-A.

For Alternative packing piece assembly See A1128 or H888.

Note:- If more than 5 arms are required, the number is to be specified by the officer ordering.

POLE 25 ft., 27 ft-6 ins & 30 ft
80 lb. "O" or "AS" Rail.
100 lb. "P or "AS" Rail.

1H867

31-7 Alt 904

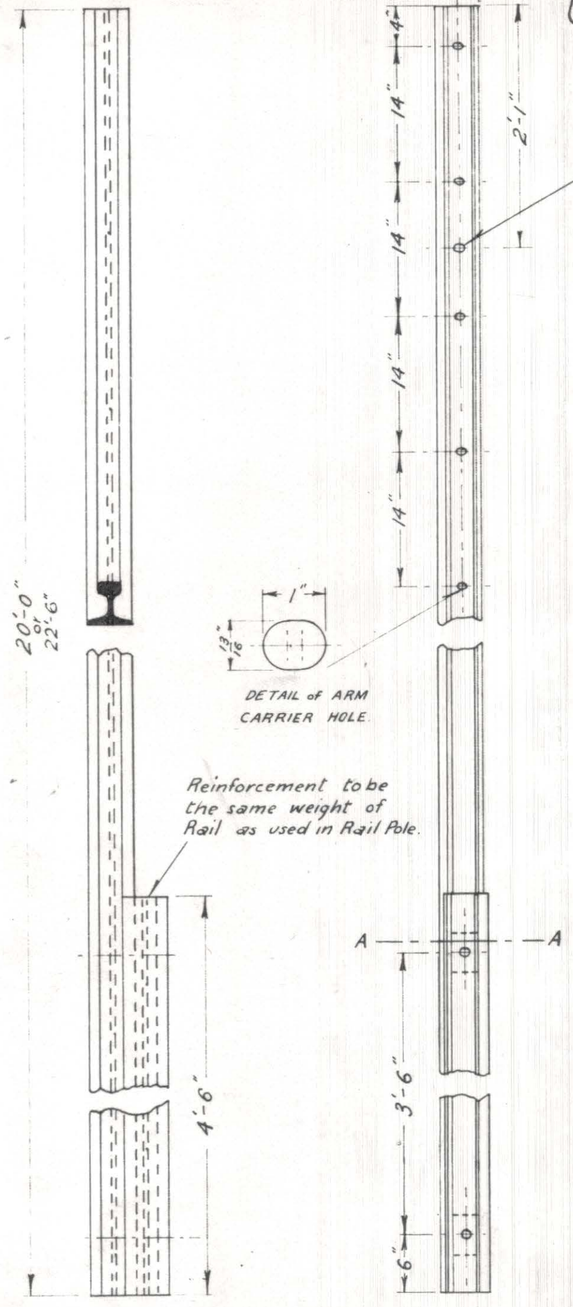

ARM CARRIERS

5A395	66lb "E" or "F" Rails.
5A395	60lb "D" "
3F2246	60lb "C" "
6A395	75lb "G" "

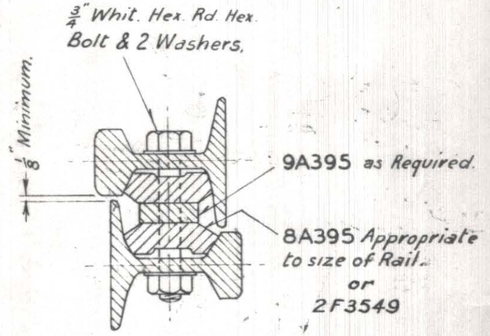

PLAN Section A-A.

For Alternative packing piece assembly. See A1128 or H888.

POLE 20 ft. & 22 ft-6 ins.
60 & 66 lb. Rails.
75 lb. "G" Rails.

2H867

31-7-56 Alt. 904

T30.2.

Alteration	VICTORIAN RAILWAYS	Sig. & Tel. Engineer	Drawn by A.D.F.	Traced by A.D.F.
No 1116 15-8-62	TELEGRAPH POLE (RAIL) DETAILS 4-7-49			H867